1750 Republic Wood Stove

Owner's Manual

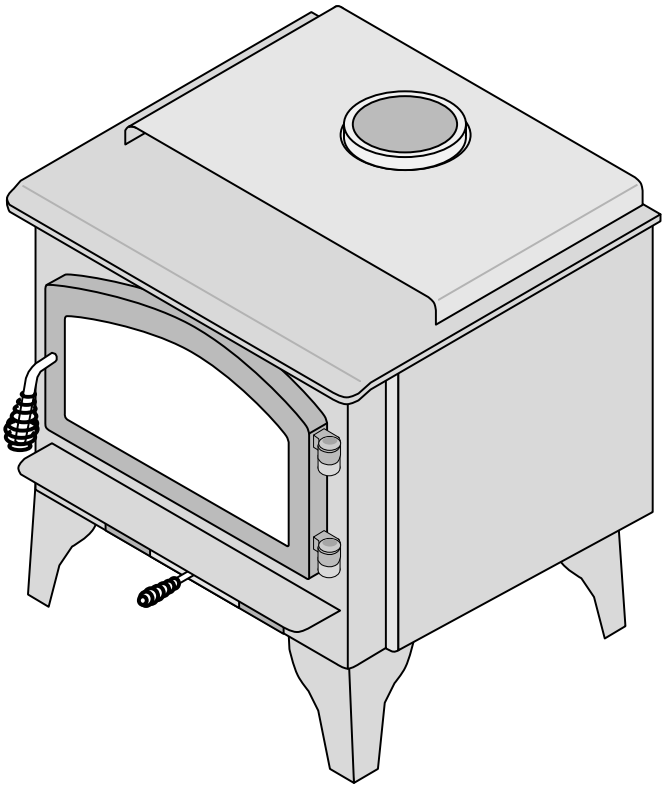

- **Freestanding Stove**
- **Mobile-Home Approved**
- **Alcove Approved**
- **Hearth-Stove Approved**

Save these instructions for future reference

SAFETY NOTICE:

If this appliance is not properly installed, a house fire may result. For your safety, follow the installation directions. Contact local building or fire officials about restrictions and installation inspection requirements in your area.

Travis Industries, Inc.
12521 Harbour Reach Drive
Mukilteo, WA 98275
www.travisproducts.com

© Copyright 2016, T.I.
$10.00 100-01433
4121715

Intertek
Tested to: U.L. 1482 & ULC S627

French language manuals at travisindustries.com
Manuels de Français langue à travisindustries.com

Introduction

We welcome you as a new owner of a 1750 wood-burning stove. In purchasing a 1750 you have joined the growing ranks of concerned individuals whose selection of an energy system reflects both a concern for the environment and aesthetics. The 1750 is one of the finest appliances the world over. This manual will explain the installation, operation, and maintenance of this appliance. Please familiarize yourself with the Owner's Manual before operating your appliance and save the manual for future reference. Included are helpful hints and suggestions which will make the installation and operation of your new appliance an easier and more enjoyable experience. We offer our continual support and guidance to help you achieve the maximum benefit and enjoyment from your appliance.

Important Information

No other 1750 appliance has the same serial number as yours. The serial number is stamped onto the label on the back of the appliance.

This serial number will be needed in case you require service of any type.

Model: 1750 Stove

Serial Number: _____

Purchase Date: _____

Purchased From: _____

_____

_____

Register your warranty online at:

traviswarranty.com

Save Your Bill of Sale.

To receive full warranty coverage, you will need to show evidence of the date you purchased your heater.

We suggest that you attach your Bill of Sale to this page so that you will have all the information you need in one place should the need for service or information occur.

NATIONAL FIREPLACE INSTITUTE NFI CERTIFIED www.nficertified.org

We suggest that our woodburning hearth products be installed and serviced by professionals who are certified in the U.S. by the National Fireplace Institute® (NFI) as NFI Woodburning Specialists or who are certified in Canada by Wood Energy Technical Training (WETT).

Wood Energy Technical Training www.wettinc.ca

General Information

Introduction & Important Information 2
Safety Precautions 4
Features & Specifications 6

Stove Installation

Planning the Installation 7
Preparation for Installation 7
Stove Installation Considerations 7
Floor Protection Requirements 8
Stove Placement Requirements 8
Clearances 8
Top View - Straight Installation 9
Top View - Corner Installation 9
Stove Leg Installation 10
Chimney Connector Requirments 10
Chimney Requirements 11
Chimney Termination Requirements 12
Outside Air Requirements 12
Alcove Installation Requirements 13
Mobile Home Requirements 14

INSTALLATION DIAGRAMS

Standard Ceiling with a Factory Built Chimney 15
Cathedral Ceiling with a Factory Built Chimney 15
Hearth Stove Positive Connection 16
Hearth Stove Direct Connection 17
Interior or Exterior Masonry Chimney 17

Operating Your Appliance

Safety Notice 18
Operating the Stove when it is Hot .....
Before Your First Fire 18
Curing the Paint 18
Over-Firing the Stove 18
Opening the Doors 19
Starting a Fire 19
Adjusting the Burn Rate 20
Approximate Air Control Settings 20

Operating Your Appliance (continued)

Ash Removal 21
Blower Operation 22
Re-Loading the Stove 22
Overnight Burn 22
Normal Operating Sounds 22
Hints for Burning 23
Selecting Wood 23
Why Dry Wood is Key 23
Wood Cutting and Storage 23
Troubleshooting 24

Maintaining Your Appliance

Daily Maintenance (while stove is in use) 26
Remove Ash (if necessary) 26
Clean the Glass (if necessary) 26
Monthly Maintenance (while appliance is in use) 27
Door and Glass Inspection 27
Creosote - Formation and Need for Removal 27
Yearly Maintenance 28
Touch Up Paint 28
Cleaning the Air Duct and Blower (if applicable) 28
Door Parts 29
Replacing the Glass 29
Replacing the Door Gasket 29
Replacing the Door Handle 29
Firebox Parts 30
Brick Removal & Replacement .....
Combustor Removal & Replacement .....

Warranty

Warranty 34

Listing Information

Listing Information 34

Optional Equipment

Rear Blower Installation 35

Index

Index 36

Safety Precautions

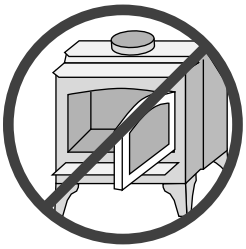

The viewing door must be closed and latched during operation.

Never block free airflow through the air vents on this appliance.

Gasoline or other flammable liquids must never be used to start the fire or "Freshen Up" the fire. Do not store or use gasoline or other flammable liquids in the vicinity of this appliance.

This appliance is designed and approved for the burning of cord wood only. Do not attempt to burn any other type of fuel other than cord wood in this appliance, it will void all warranties and safety listings.

Ashes must be disposed in a metal container with a tight lid and placed on a non-combustible surface well away from the home or structure.

Do not touch the appliance while it is hot and educate all children of the danger of a high-temperature appliance. Young children should be supervised when they are in the same room as the appliance.

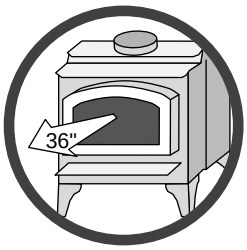

Keep furniture, drapes, curtains, wood, paper, and other combustibles a minimum of 36" (914mm) away from the front of the appliance.

This appliance must be properly installed to prevent the possibility of a house fire. The instructions must be strictly adhered to. Do not use makeshift methods or compromise in the installation.

Contact your local building officials to obtain a permit and information on any installation restrictions or inspection requirements in your area. Notify your insurance company of this appliance as well.

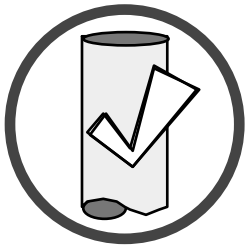

Inspect the chimney connector and chimney at least twice monthly and clean if necessary. Creosote may build up and cause a house fire.

Do not connect this appliance to any chimney serving another appliance.

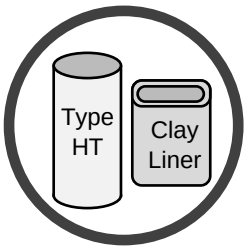

This appliance must be connected to a listed high temperature (UL 103 HT) residential type chimney or an approved masonry chimney with a standard clay tile, or stainless steel liner.

When installed in a mobile home, this appliance must be bolted to the floor, have outside air, and not be installed in the bedroom (Per H.U.D. requirements). Check with local building officials.

Do not place clothing or other flammable items on or near this appliance.

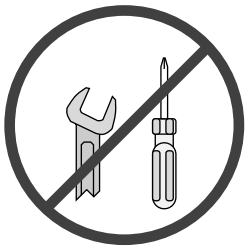

Never try to repair or replace any part of this appliance unless instructions are given in this manual. All other work must be done by a trained technician. Do not make any changes or modifications to an existing masonry fireplace or chimney to install this appliance.

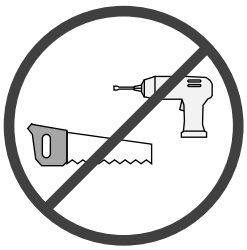

This wood heater has a manufacturer-set minimum low burn rate that must not be altered. It is against federal regulations to alter this setting or otherwise operate this wood heater in a manner inconsistent with operating instructions in this manual.

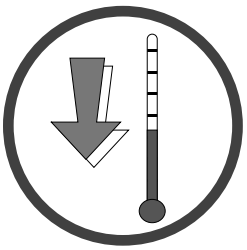

Allow the appliance to cool before carrying out any maintenance or cleaning.

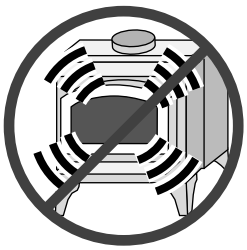

Overfiring the appliance may cause a house fire. If a unit or chimney connector glows, you are overfiring.

Maintain the door and glass seal and keep them in good condition.

Avoid placing wood against the glass when loading. Do not slam the door or strike the glass.

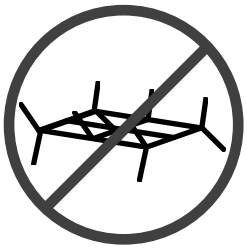

Do not use a grate or other device to elevate the fire off of the firebox floor. Burn the fire directly on the bricks.

Do not throw this manual away. This manual has important operating and maintenance instructions that you will need at a later time. Always follow the instructions in this manual.

Travis Industries, Inc. grants no warranty, implied or stated, for the installation or maintenance of your appliance, and assumes no responsibility of any consequential damage(s).

Smoke and CO Detectors: Make sure your home has a working smoke detector, especially near any bedrooms. We recommend having a smoke and/or CO detector in the same room as the wood heater for additional safety.

Proposition 65 Warning: Fuels used in gas, woodburning or oil fired appliances, and the products of combustion of such fuels, contain chemicals known to the State of California to cause cancer, birth defects and other reproductive harm.

California Health & Safety Code Sec. 25249.6

Installation Options

- Freestanding
- Freestanding in an Alcove
- Freestanding in a Mobile Home
- Freestanding Hearth Stove

Features

- 2.2 Cubic Foot Firebox Volume (62 Liter)
- Single Operating Control
- Accepts Logs Up to 18" Long (457mm)
- Steel Plate Construction (5/16" & 3/16") (8mm & 5mm)
- Heavy Duty Refractory Firebrick
- Optional High-Tech Blower

Heating Specifications

Approximate Maximum Heating Capacity (in square feet)*	1,200 to 2,000
Maximum BTU's per Hour (Cord Wood Calculation)	72,400
Maximum Burn Time	Up to 10 Hours

* Heating capacity will vary depending on the home's floor plan, degree of insulation, and the outside temperature. It is also affected by the quality and moisture level of the fuel.

This model was not tested for efficiency however it is assigned a default efficiency of 63% by the EPA under previous subpart AAA. Efficiency of this wood heater will be affected by the operational burn rate and the moisture content of the wood used as fuel.

Dimensions

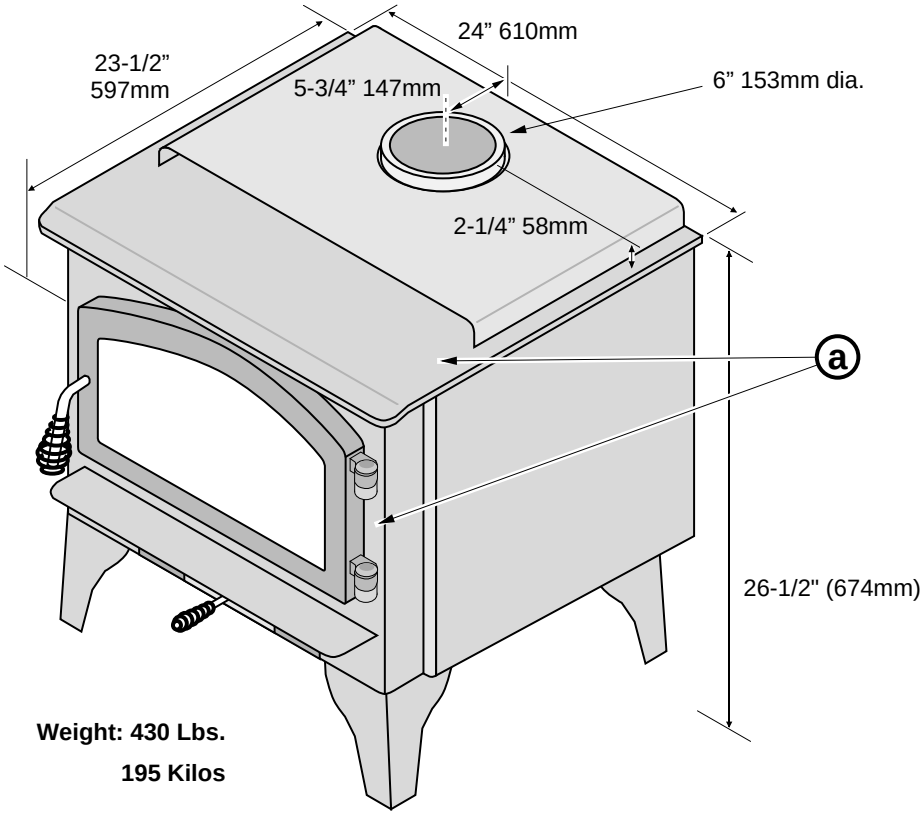

Figure 1

Emissions

This heater meets the 2015 U.S. EPA's crib wood emission limits for wood heaters sold after May 15, 2015. Tested to Method 28, 5H this heater has been shown to deliver heat at rates ranging from 9,300 to 42,200 BTU/hr and an emission value of 1.9g/h.

SAFETY NOTICE:

Please read this entire manual before you install and use your new room heater. Failure to follow instructions may result in property damage, bodily injury, or even death. Contact local building or fire officials about restrictions and installation inspection requirements in your area.

Always use gloves when operating a hot stove. The door handle and other components become very hot during normal use.

Planning The Installation

We suggest that you have an authorized Travis Industries dealer install your stove. If you install the stove yourself, your authorized dealer should review your installation plans.

Check with local building officials for any permits required for installation of this stove and notify your insurance company before proceeding with installation.

The location of your wood heater in your home will decide how affectively the heat produced will spread throughout your house. Attention to the home design with consideration of natural convection and air circulation should be taken into account when choosing the placement of your heater within the home.

Preparation for Installation

The stove can be lightened by removing the firebricks and baffle (pg 30) - replace before operation.

- Check for damage to the exterior of the stove.
- Check the interior of the firebox (replace cracked firebrick and make sure baffle is in place).
- The door (shipped separately - SKU 96100612 or 96100724) must be installed prior to operation.
- The stove must be installed with the legs (see page 10).

Stove Installation Considerations

The table below details the six most common types of installations and the considerations for each type. Alternative methods of installation are available if they comply with local building codes.

Installation Type	Considerations
Standard Ceiling with a Factory Built Chimney (Page 15)	• Requires ceiling and roof penetration • Provides best draft
Cathedral Ceiling with a Factory Built Chimney (Page 15)	• Cathedral style chimney support required • Provides best draft
Hearth Stove Positive Connection (Page 16)	• Utilizes existing masonry fireplace (not approved for zero clearance (metal) fireplaces) • Provides good draft due to full reline • Easier to clean than direct or horizontal hearth stove
Hearth Stove Direct Connection (Page 17)	• Utilizes existing masonry fireplace (not approved for zero clearance (metal) fireplaces) • Requires construction of a "block-off plate" • Draft reduced due to elbows & chimney cross section
Interior Masonry Chimney (Page 17)	• Utilizes existing masonry chimney (not approved for zero clearance (metal) fireplaces)

Floor Protection Requirements

- Stove must be placed on the Travis Industries legs or Pedestal.
- Floor protection must extend to the sides, rear, and front of the stove (see “Clearances” below for minimum floor protection).
  NOTE: when installed with reduced-clearance connector, the clearance to the backwall may be less than the floor protection requirement. In this case the floor protection must extend to the wall.
- Floor protection must be non-combustible and at least .018" thick (26 guage).

Stove Placement Requirements

Clearances may be reduced by methods specified in NFPA 211, listed wall shields, pipe shields, or other means approved by local building or fire officials.

- Stove must be placed so that no combustibles are within, or can swing within (e.g. drapes, doors), 36" (914mm) of the front of the stove
- If the stove is placed in a location where the ceiling height is less than 7' (2134mm), it must follow the requirements in the section "Alcove Installation Requirements"
- Must maintain the clearances to combustibles listed below (drywall, furniture, etc.):

Clearances

- The following clearances must be met (see Figure 2 and Figure 3)

Clearance Requirements:		Singlewall Connector		Reduced Clearance*	
A	Sidewall to stove	15"	381mm	13"	330mm
B	Backwall to stove	15”	381mm	4-1/4"	108mm
C	Cornerwall to stove	15"	381mm	6-1/2"	165mm
D	Connector to sidewall	24"	610mm	21-1/2"	546mm
E	Connector to backwall	17-3/4"	451mm	6-1/2"	165mm
F	Connector to cornerwall	24”	610mm	15”	381mm
G	Side & Rear Floor Protector	6” 153mm (US) 8” 204mm (Canada)		6” 153mm (US) 8” 204mm (Canada)	
H	Front Floor Protector	16” 407mm (US) 18” 458MM (Canada)		16” 407mm (US) 18” 458MM (Canada)	

*Reduced clearance installations require one of the chimneys and connectors listed below:

AMERI-TEC model DCC with model HS chimney
DURAVENT model DVL with DURATEC or DURA-PLUS chimney
GSW Super Chimney Twenty-One connected directly to appliance
I.C.C. Excel (2100-2 Can.) (103-HT USA) chimney with HP connector
METALFAB model DW connector with TG chimney
OLIVER MACLEOD PROVENT model PV connector with model 3103 chimney
SECURITY model DP connector with SECURITY model ASHT or S2100 chimney
SELKIRK METALBESTOS model DS connector with model SSII chimney
Standard Masonry Chimney with any one of the above listed connectors

NOTE: Reduced clearance connectors may not connect to the flue collar, an appliance adapter may be required.

NOTE: Mobile Home installations must use the reduced clearance connector and clearances listed above.

NOTE: Standard residential installations with reduced clearance connector may use the “Connector to Wall” clearance determined by the connector manufacturer if approved by local code. This clearance is established by the connector manufacturer and falls under the connector manufacturer’s listing. “Stove to Wall” clearances must always be met.

Top View - Straight Installation

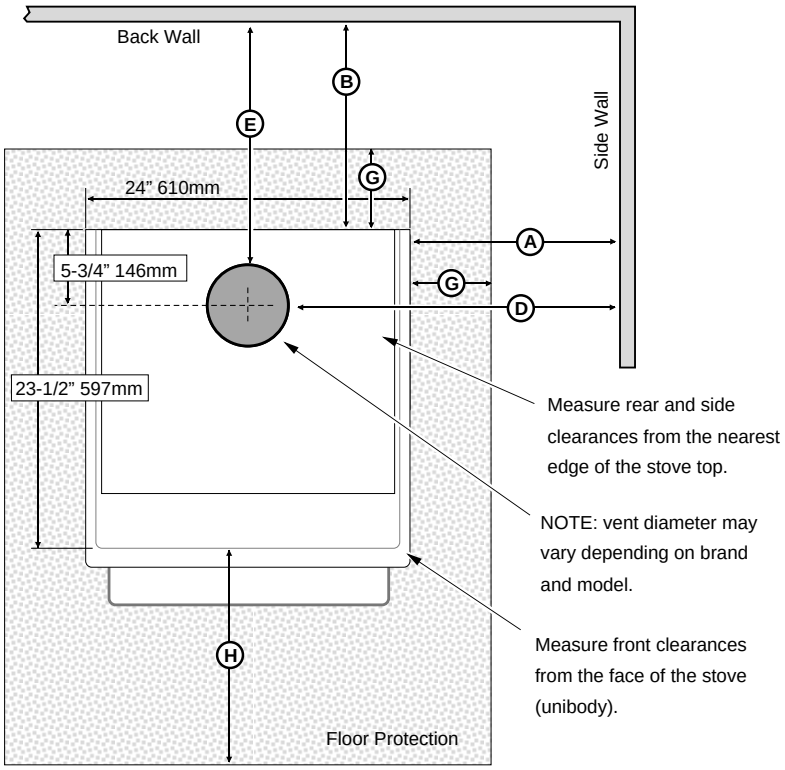

Figure 2

Top View - Corner Installation

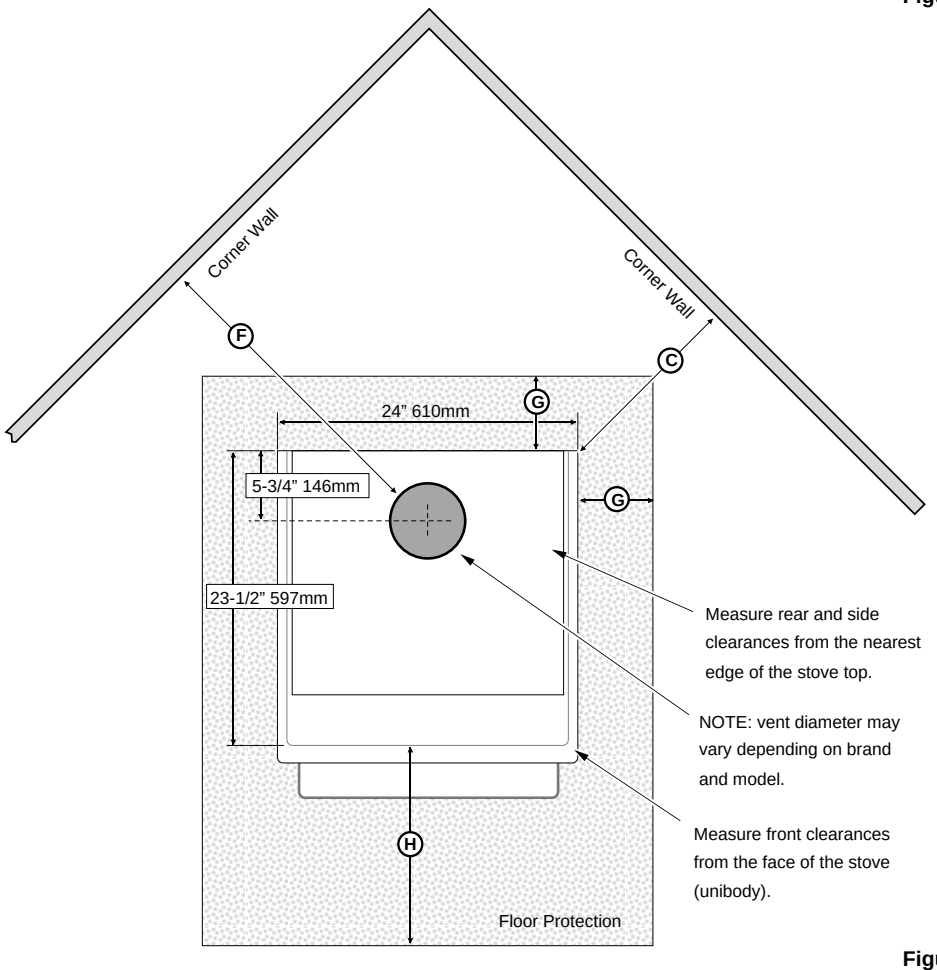

Figure 3

Stove Leg Installation

Part Numbers: Brass # 99200500, Cast Black # 99200800, Sculptured Steel # 99200105

- Raise the stove 8" (use lumber). Attach each leg following the instructions below.

Attach each leg to the stove by inserting a bolt and washer through the hole or slot in the leg and into the threaded hole on the stove.

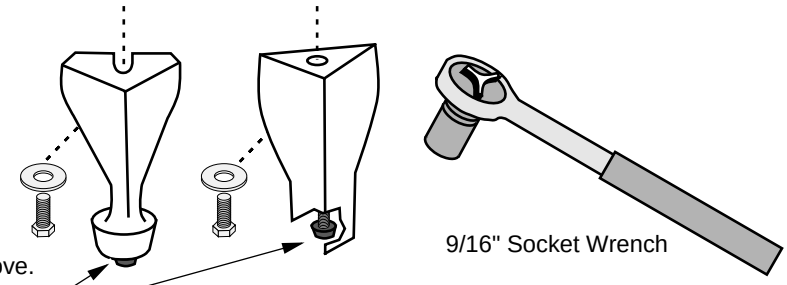

These rubber-tipped bolts are for leveling the stove. Make sure they contact the floor. Do not adjust with weight on the legs, the rubber tips may tear.

Chimney Connector Requirements

- Chimney connector is required from the flue collar of the stove to the factory-built chimney (see Figure 5) or masonry chimney (see Figures 13, 14, and 15).
- The chimney connector must be 6” (152mm) diameter and a minimum 24 gauge black steel, 26 gauge blued steel, or one of the reduced-clearance connectors listed on page 8.

  NOTE: Aluminum or galvanized steel is not allowed – these materials can not withstand the flue temperatures and may give off toxic fumes when heated.

  NOTE: Standard residential installations may use single-wall connector (Mobile-Homes may **not**).
- The chimney connector may not pass through a ceiling, attic, roof, closet, or any other concealed space (use listed UL 103 HT chimney – see “Chimney Requirements for details). **DO NOT USE CONNECTOR PIPE AS CHIMNEY**.
- The chimney connector should be as short and direct as possible. No more than 180° of elbows (two 90° elbows, or two 45° & one 90° elbow, etc.) may be used for the entire system (connector and chimney).. Horizontal runs should slope upwards 1/4” (6mm) per foot (305mm) and be a maximum 36” long (914mm).
- The chimney connector must be installed with the crimped end pointing downwards (see Figure 4). This prevents creosote from leaking to the exterior of the pipe.

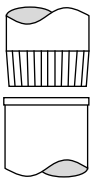

On singlewall pipe the crimped end points downward.

Figure 4

- The chimney connector must be fastened to the stove and each adjoining section (and chimney).

Chimney Requirements

- DO NOT CONNECT THIS UNIT TO A CHIMNEY FLUE SERVING ANOTHER APPLIANCE.
- UL 103 HT Chimney must be used from the first ceiling or floor penetration to the chimney cap.
- Use 6" diameter type UL 103 HT chimney from one manufacturer (do not mix brands) or code approved masonry chimney with a flue liner.
- Chimney must be fastened to each adjoining section.
- Follow the chimney manufacturer's clearances and requirements.
- Use the chimney manufacturer's fire stops, attic guards, roof supports, and flashings when passing through a ceiling
- No more than 180° of elbows (two 90° elbows, or two 45° & one 90° elbow, etc.) may be used for the entire system (connector and chimney).

  NOTE: Additional elbows may be allowed if draft is sufficient. Whenever elbows are used the draft is adversely affected. Additional chimney height may be required to boost draft.

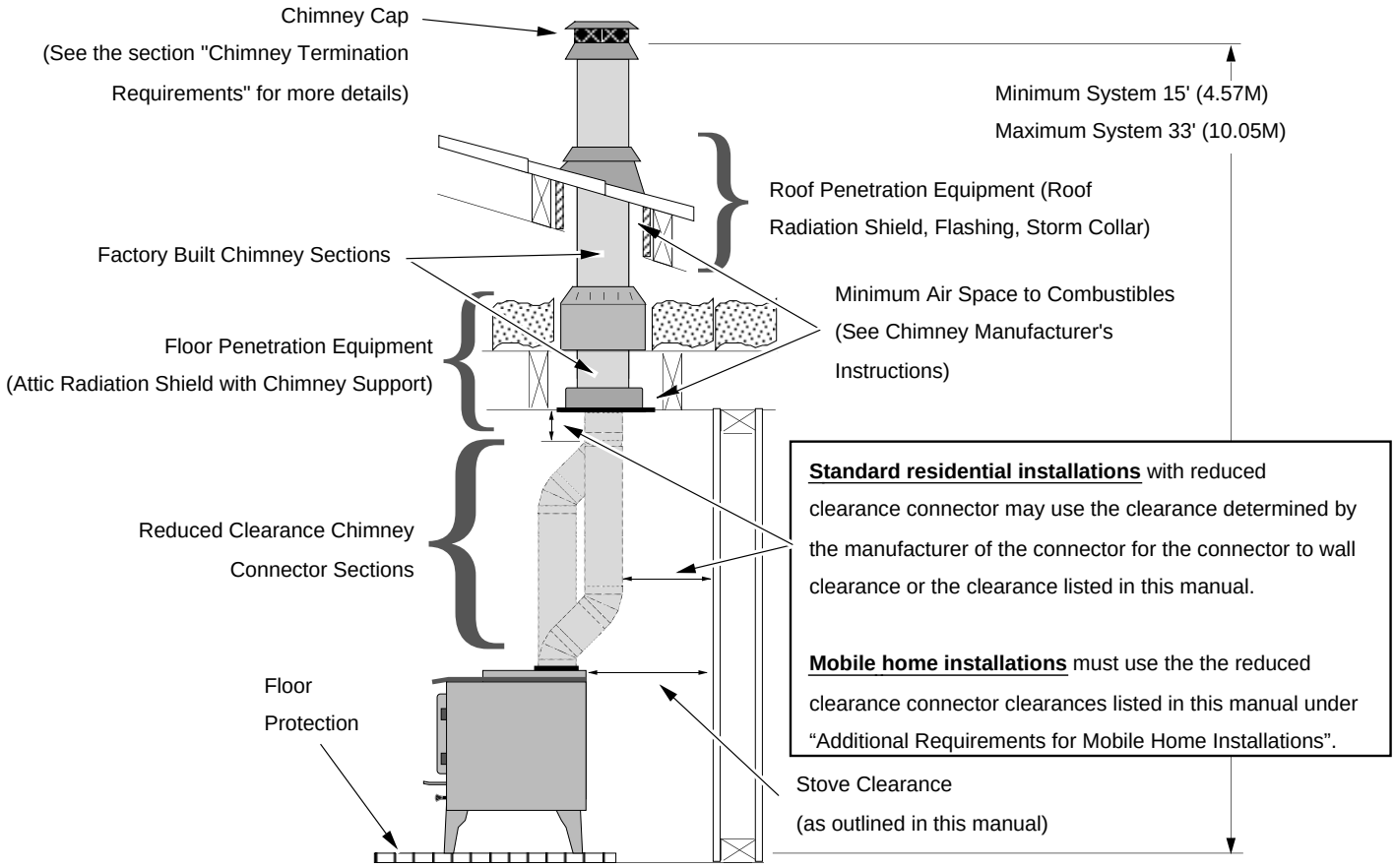

Figure 5

Drafting Performance	Draft is the force which moves air from the appliance up through the chimney. The amount of draft in your chimney depends on the length of the chimney, local geography, nearby obstructions and other factors. Too much draft may cause excessive temperatures in the appliance and may damage the heater. Inadequate draft may cause backpuffing into the room and `plugging' of the chimney. Inadequate draft will cause the appliance to leak smoke into the room through appliance and chimney connector joints. An uncontrollable burn or excessive temperature indicates excessive draft.

Chimney Termination Requirements

- Must have an approved cap (to prevent water from entering)
- Must not be located where it will become plugged by snow or other material
- Must terminate at least 3' (914mm) above the roof **and** at least 2' (610mm) above any portion of the roof within 10' (3.04M) - see Figure 6 below.

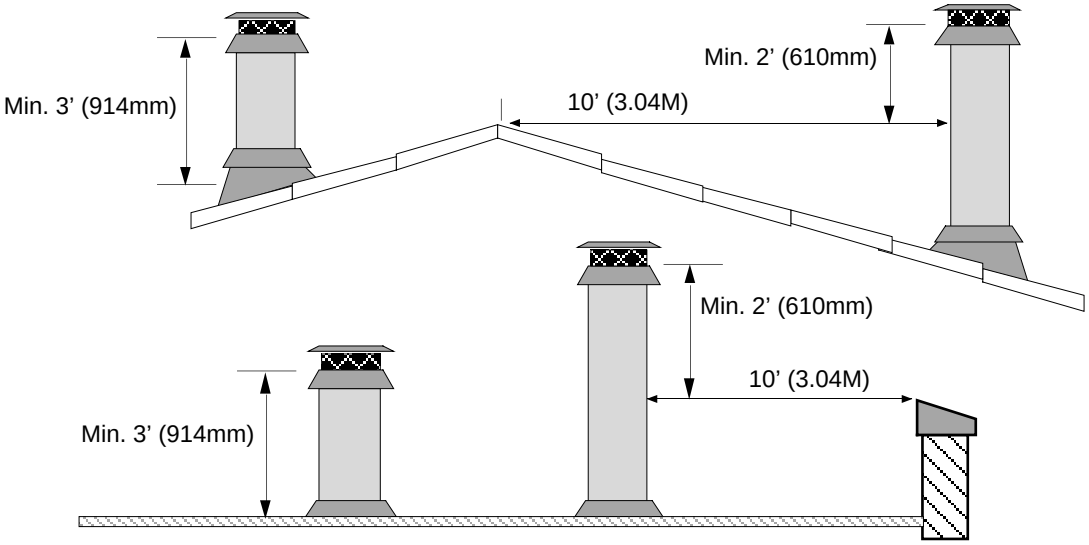

Figure 6

Outside Air Requirements

- Required for mobile homes & in certain localities (check with building officials).
- May be drawn from a ventilated area (crawl space, etc. - check with building officials).
- Must not be drawn from an enclosed space (garage, unventilated crawl space).
- Requires the optional outside air kit or boot.
- Air duct maximum length is 15' (4.57M) with a minimum cross-section of 16 square inches (10404mm) or 6' (1.82M) with a minimum cross section of 7 square inches (4489mm).

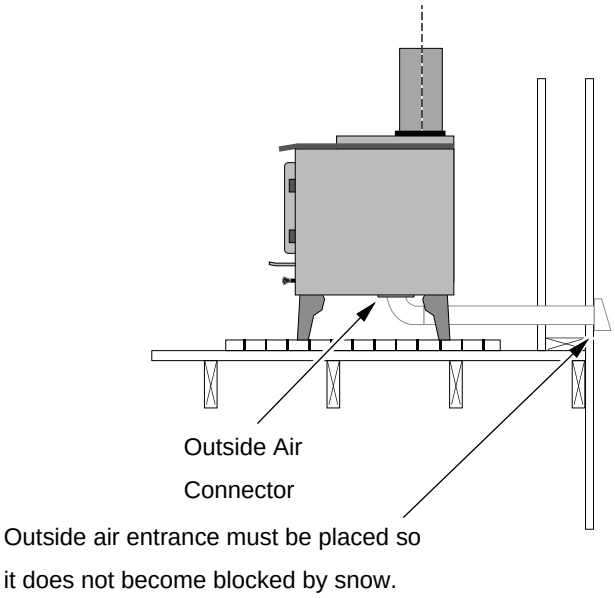

Alcove Installation Requirements

Whenever the stove is placed in a location where the ceiling height is less than 7' (2134mm) tall, it is considered an alcove installation. Because of the reduced height, the special installation requirements listed below must be met.

- Chimney connector and chimney must be one of the following types:

  AMERI-TEC model DCC with model HS chimney
  DURAVENT model DVL with DURATEC or DURA-PLUS chimney
  GSW Super Chimney Twenty-One connected directly to appliance
  I.C.C. Excel (2100-2 Can.) (103-HT USA) chimney with HP connector
  METALFAB model DW connector with TG chimney
  OLIVER MACLEOD PROVENT model PV connector with model 3103 chimney
  SECURITY model DP connector with SECURITY model ASHT or S2100 chimney
  SELKIRK METALBESTOS model DS connector with model SSII chimney
  Standard Masonry Chimney with any one of the above listed connectors

  NOTE: Reduced clearance connectors may not connect to the flue collar – an appliance adapter may be required.

- Alcoves are classified as combustible or non-combustible. Non-combustible alcoves must have walls and a ceiling that are 3 1/2" (89mm) thick of a non-combustible material (brick, stone, or concrete - see Figure 7). This non-combustible material must be spaced and ventilated at least 1" (25mm) off of all combustible materials (walls, ceiling, etc.) to allow air to move around the non-combustible walls and ceiling. All other alcoves are considered combustible. The clearances below must be met:

Minimum Clearance (See the Figure 7 **below)**		Combustible Alcove		**Non-Combustible Alcove**	
A	Sidewall to stove	13"	330mm	6"	152mm
B	Backwall to stove	4-1/4"	108mm	2"	51mm
D	Connector to sidewall	21-1/2"	546mm	14-1/2"	368mm
E	Connector to backwall	6-1/2"	165mm	4-1/4"	108mm
G	Maximum depth of alcove	48”	1219mm	48"	1219mm
H	Minimum width of alcove	50”	1270mm	36"	914mm
J	Minimum height of alcove	84”	2134mm	6" (152mm) above stove top	

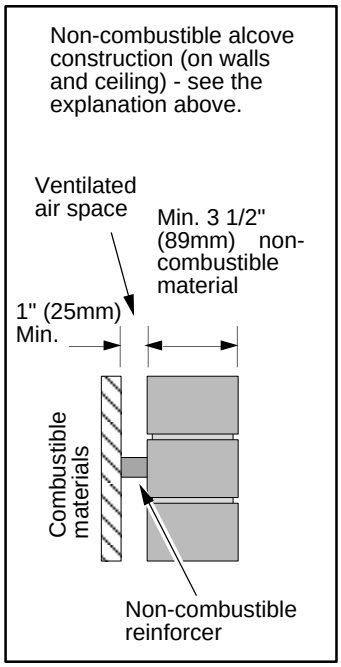

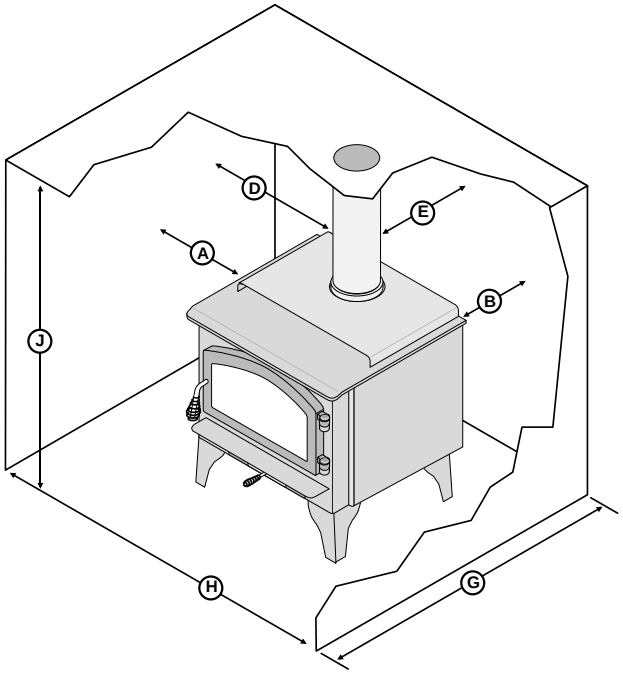

Figure 7

Mobile Home Requirements

- Outside air must be installed - see "Outside Air Requirements" on page 12
- Chimney connector and chimney must be one of the following types:

  AMERI-TEC model DCC with model HS chimney
  DURAVENT model DVL with DURATEC or DURA-PLUS chimney
  GSW Super Chimney Twenty-One connected directly to appliance
  I.C.C. Excel (2100-2 Can.) (103-HT USA) chimney with HP connector
  METALFAB model DW connector with TG chimney
  OLIVER MACLEOD PROVENT model PV connector with model 3103 chimney
  SECURITY model DP connector with SECURITY model ASHT or S2100 chimney
  SELKIRK METALBESTOS model DS connector with model SSII chimney
  Standard Masonry Chimney with any one of the above listed connectors

  NOTE: Reduced clearance connectors may not connect to the flue collar – an appliance adapter may be required.
- Stove placement must maintain the following clearances to combustibles (drywall, furniture, etc.)

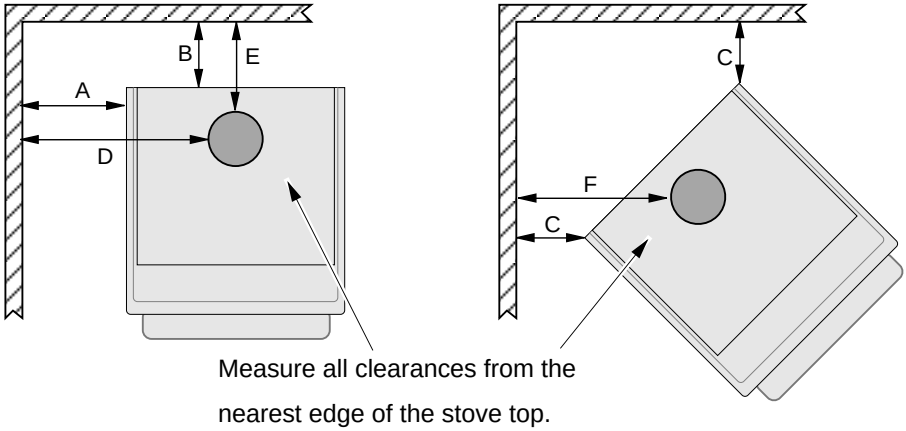

Figure 8

Clearance Requirements:		Mobile Home Clearance	
A	Sidewall to stove	13"	330mm
B	Backwall to stove	4-1/4"	108mm
C	Cornerwall to stove	6-1/2"	165mm
D	Connector to sidewall	21-1/2"	546mm
E	Connector to backwall	6-1/2"	165mm
F	Connector to cornerwall	15”	381mm

- If using offsets, use the connector clearance listed in Figure 9, **not the connector manufacturer's clearance**.
- The appliance must be secured to the floor (consult your building official). Secure the outside air boot to the floor and stove to insure the stove does not dislocate.
- Mobile home installations require a spark arrester at the chimney termination.
- The appliance must be grounded to the chassis of the mobile home (consult your building official).
- **WARNING:DO NOT INSTALL IN SLEEPING ROOM.**
- **CAUTION:THE STRUCTURAL INTEGRITY OF THE MOBILE HOME FLOOR, WALL, AND CEILING/ROOF MUST BE MAINTAINED.**

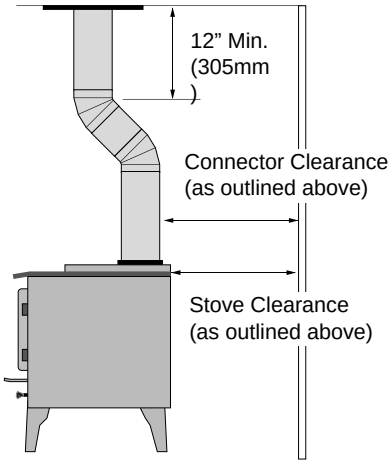

Figure 9

Standard Ceiling with a Factory Built Chimney

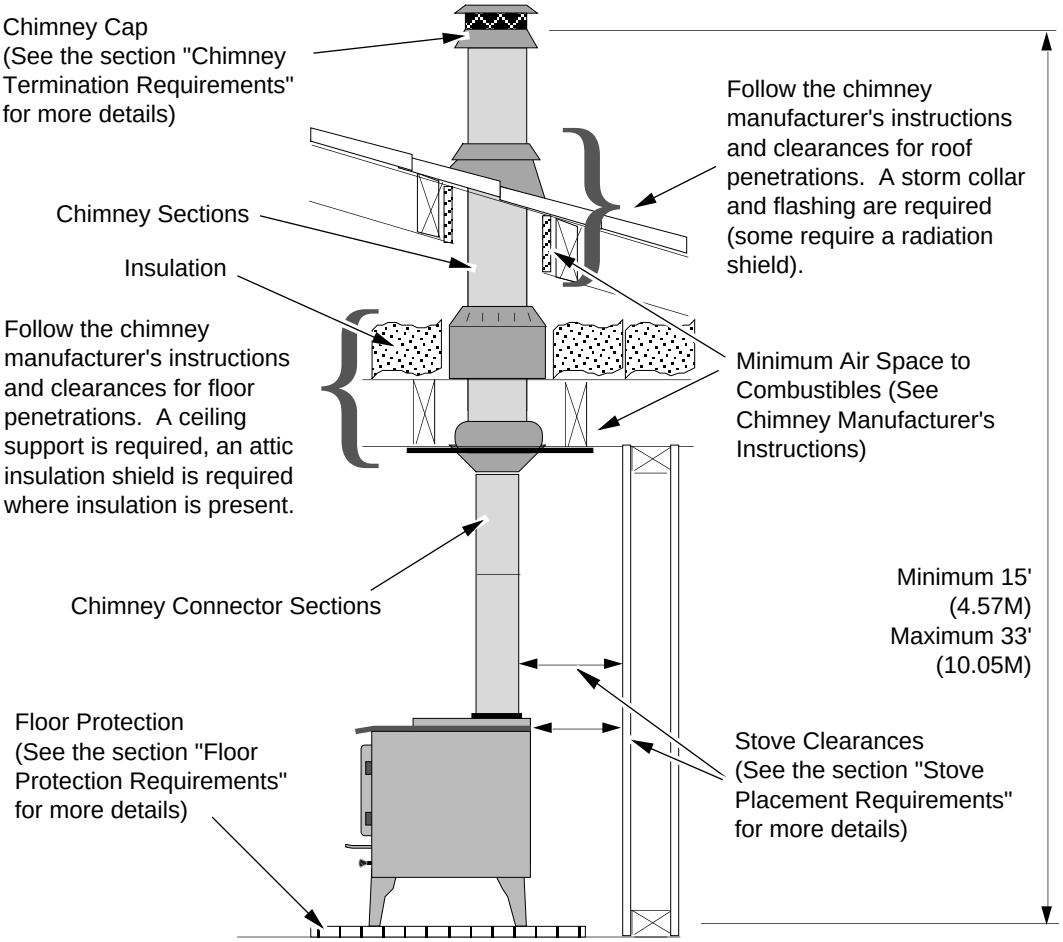

Figure 10

Cathedral Ceiling with a Factory Built Chimney

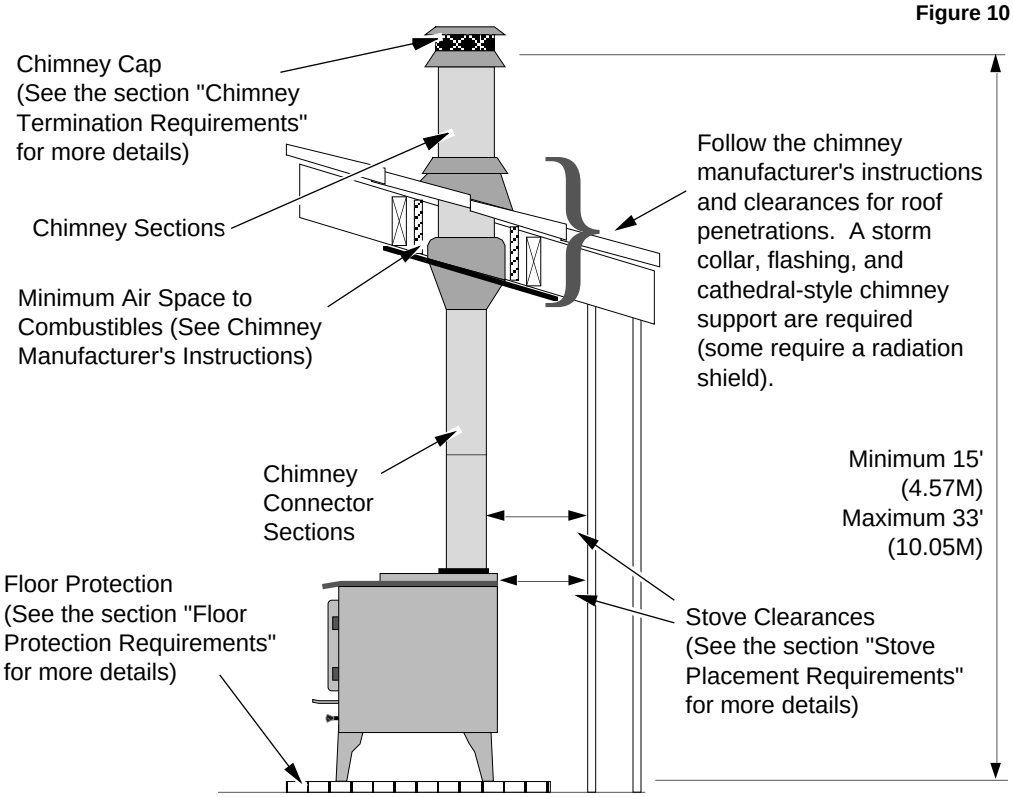

Figure 11

Exterior Factory Built Chimney

NOTE:

Exterior chimneys are subject to greater moisture and creosote accumulation due to the lower temperatures. An insulated chase will reduce these accumulations (the proper clearances to the chimney must be maintained).

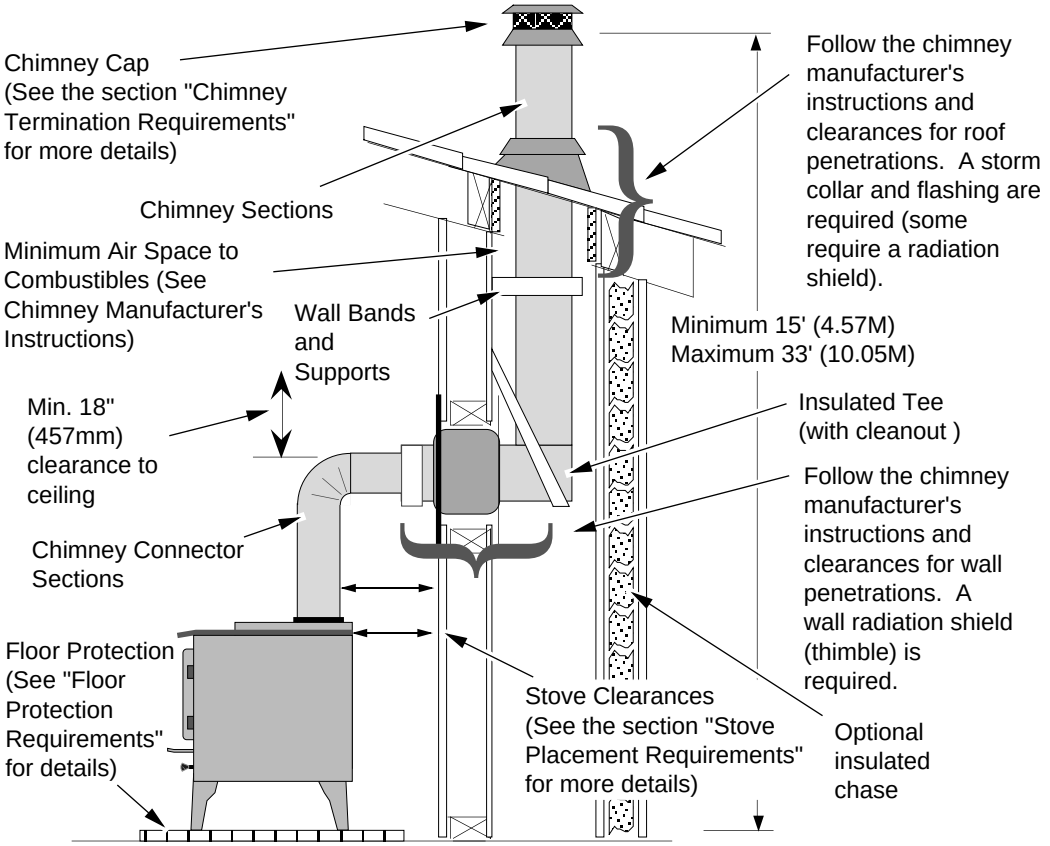

Figure 12

Hearth Stove Positive Connection

NOTE:

Most factory-built chimney manufacturers make stainless steel chimney liners, either flexible or rigid. This provides a wide variety of installation options. Make sure to follow the manufacturer's instructions for installation and support.

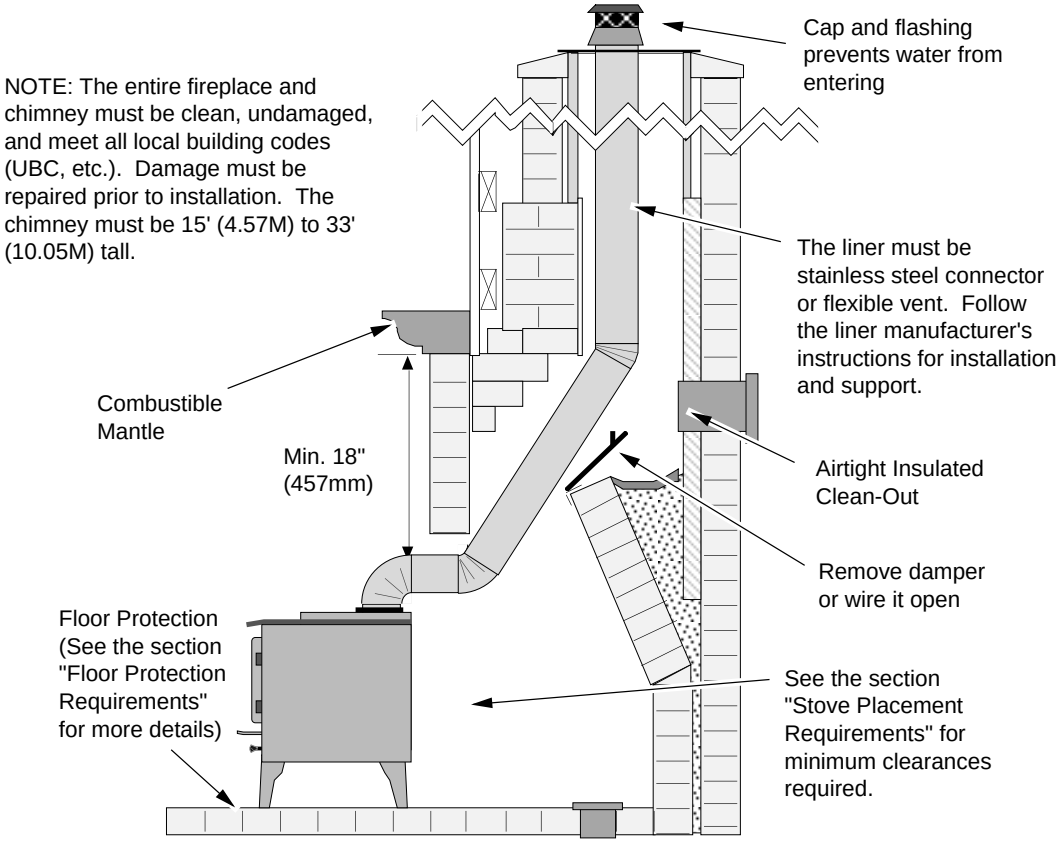

Figure 13

Hearth Stove Direct Connection

NOTE:

Direct connections require installation of an airtight, non-combustible block-off plate or damper adapter.

NOTE: The chimney must have a clay tile liner. If it does not, the installation must use a positive connection (full reline). The entire fireplace and chimney must be clean, undamaged, and meet all local building codes (UBC, etc.). Damage must be repaired prior to installation. The chimney must be 15' (4.57M) to 33' (10.05M) tall.

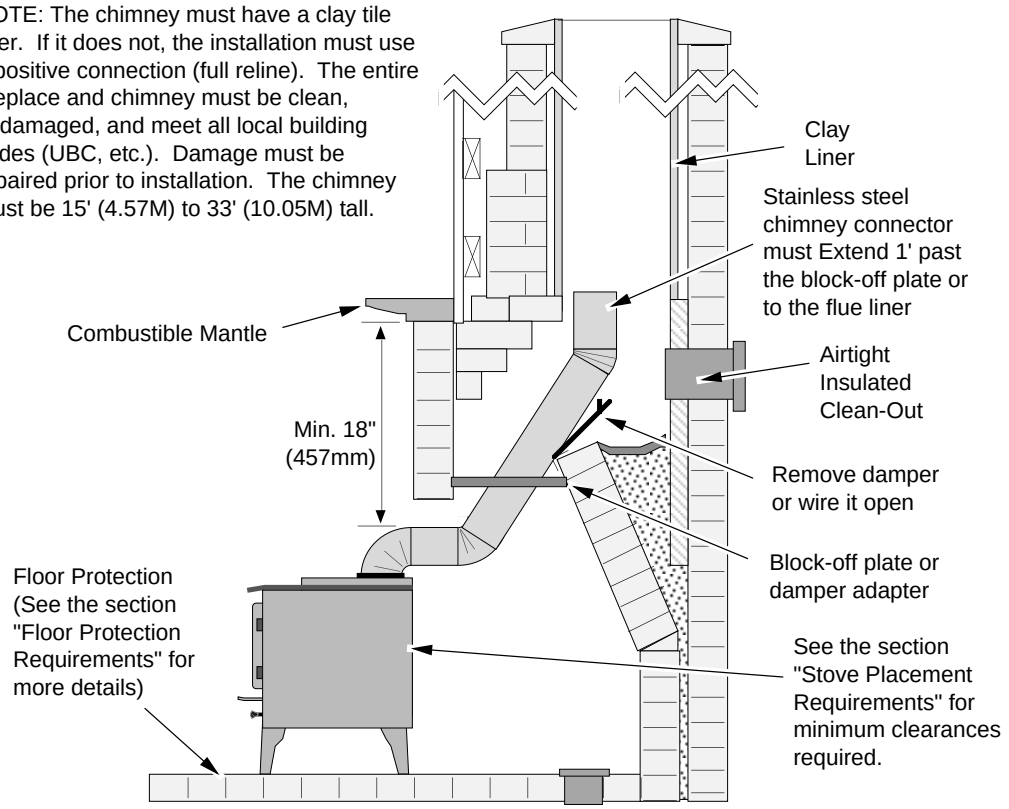

Figure 14

Interior or Exterior Masonry Chimney

NOTE:

This type of installation is not allowed in Canada.

NOTE:

This type of installation requires a UBC approved masonry connector or other method approved by the NFPA 211 standard.

See chimney connector requirements on page 10 for further details.

NOTE: The chimney must have a clay tile liner. If it does not, the installation must use a positive connection (full reline). The entire fireplace and chimney must be clean, undamaged, and meet all local building codes (UBC, etc.). Damage must be repaired prior to installation. The chimney must be 15' (4.57M) to 33' (10.05M) tall.

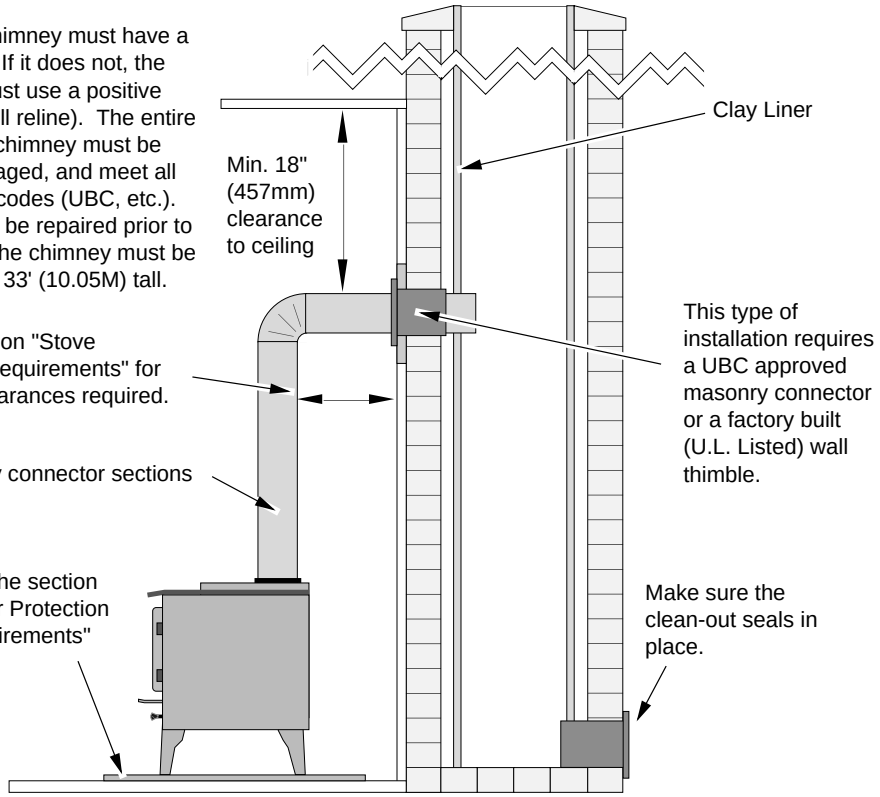

Figure 15

Safety Notice

If this appliance is not properly installed, a house fire may result. For your safety, follow the installation directions. Contact local building or fire officials about restrictions and installation inspection requirements in your area.

Read and follow all of the warnings on pages 4 and 5 of this manual.

Before Your First Fire

Verify the Installation

Before starting the stove, verify that the stove is properly installed and all of the requirements in this manual have been followed.

Keep all flammable materials 36" away from the front of the stove (drapes, furniture, clothing, etc.).

Curing the Paint

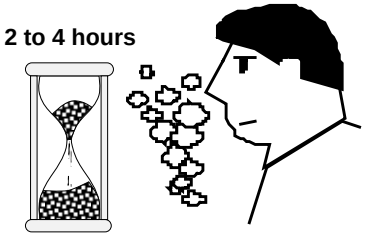

Follow the steps below to cure the paint (first fire):

a) Open doors and windows in the room to ventilate the heater during the curing process.

b) Vacate the room. The fumes from the initial heating process are non-toxic but may be unpleasant.

c) Slowly bring the heater to a medium burn (400°F/204°C) for 45 minutes. Then increase the burn temperature to a hot burn (600°F/315°C) for an additional 45 minutes. This will cure the paint.

Door Gasket - The door gasket might adhere to the paint on the front of the heater. Leave the door slightly ajar for the first fire and be careful when opening the door after the first fire.

Carbon Monoxide (CO) Emissions

Smoke from wood heaters contain CO. This gas is an indication of incomplete combustion and is detrimental to the environment and to your health. The more visible the smoke, the higher the CO levels. Burning dry wood is the most significant step you can take to reduce CO emissions. It is also important to understand the combustion process so you can burn your heater efficiently. Read the manual thoroughly so that you can operate your heater in the most efficient and clean manner possible.

Over-Firing the Stove

DO NOT OVERFIRE THIS HEATER: Attempts to achieve heat output rates that exceed heater design specifications can result in permanent damage to the heater.

This stove was designed to operate at a high temperature. But due to differences in vent configuration, fuel, and draft, this appliance can be operated at an excessive temperature. If the stove top or other area starts to glow red, you are over-firing the stove. Shut the air control down to low and allow the stove to cool before proceeding.

Over-firing may lead to damage of plated surfaces. If you are uncertain of over-firing conditions, we suggest placing a stove thermometer (e.g. Rutland® Model 710) directly over the door on the stove top - temperatures exceeding 800° are generally considered over-firing and will void the warranty.

Opening the Door

The door becomes hot during use. Use a glove to open the door if the handle is hot.

Rotate the door handle.

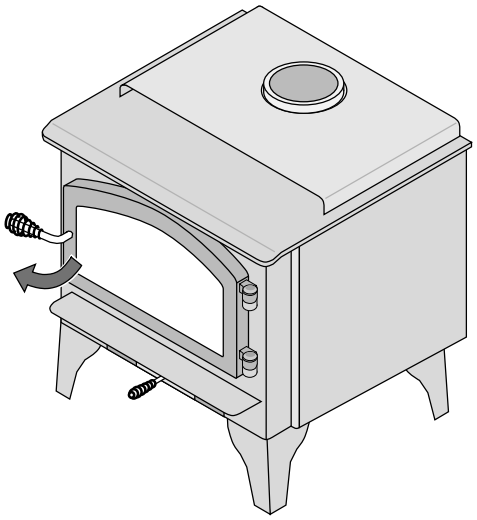

Swing the door open.

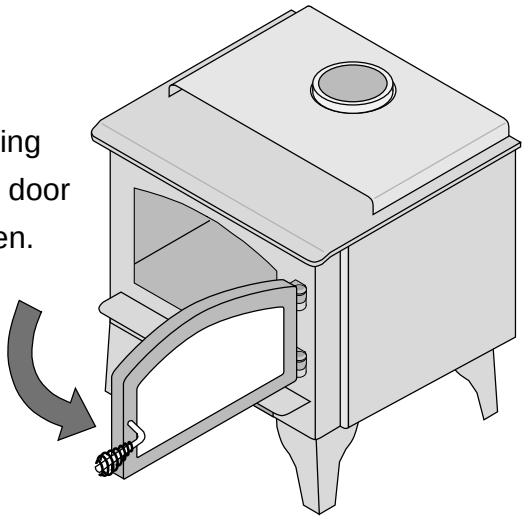

Starting a Fire

Since the dawn of time man has debated the best way to start a fire. Some use the boy-scout "tee-pee", some prefer the "tic-tac-toe" stack. Either way, review the hints and warnings below to ensure proper fire starting.

- Make sure the air control and is pulled out. If additional air is needed, open the doors 1/4" during the first five minutes of start-up.

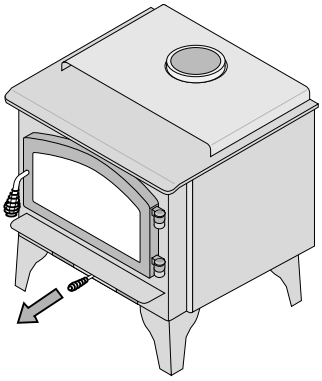

Never use gasoline, gasoline-type lantern fuel, kerosene, charcoal lighter fluid, or similar liquids to start or "freshen up" a fire in this stove. Keep all such liquids well away from the stove while it is in use.

If using a firestarter, use only products specifically designed for stoves - follow the manufacturer's instructions carefully.

If the smoke does not pass up the chimney, ball up one sheet of newspaper, place it in the center of the firebox and light it. This should start the chimney drafting (this eliminates "cold air blockage").

Use plenty of kindling to ensure the stove reaches a proper temperature. Once the kindling is burning rapidly, place a few larger pieces of wood onto the fire.

Starting a “Top-Down Fire”

One particularly successful method for starting a fire is to stack several large pieces of wood in the center of the stove (see the illustration to the right). Then place a several wads of newspaper in the center with kindling on top. When you light the newspaper this “top-down” fire will burn its way to the center, igniting the larger pieces. With some practice, this method should work for you.

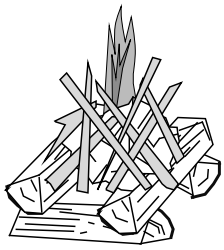

Adjusting the Burn Rate

Use the air control slider to control the burn rate of the stove. See the illustration below for details.

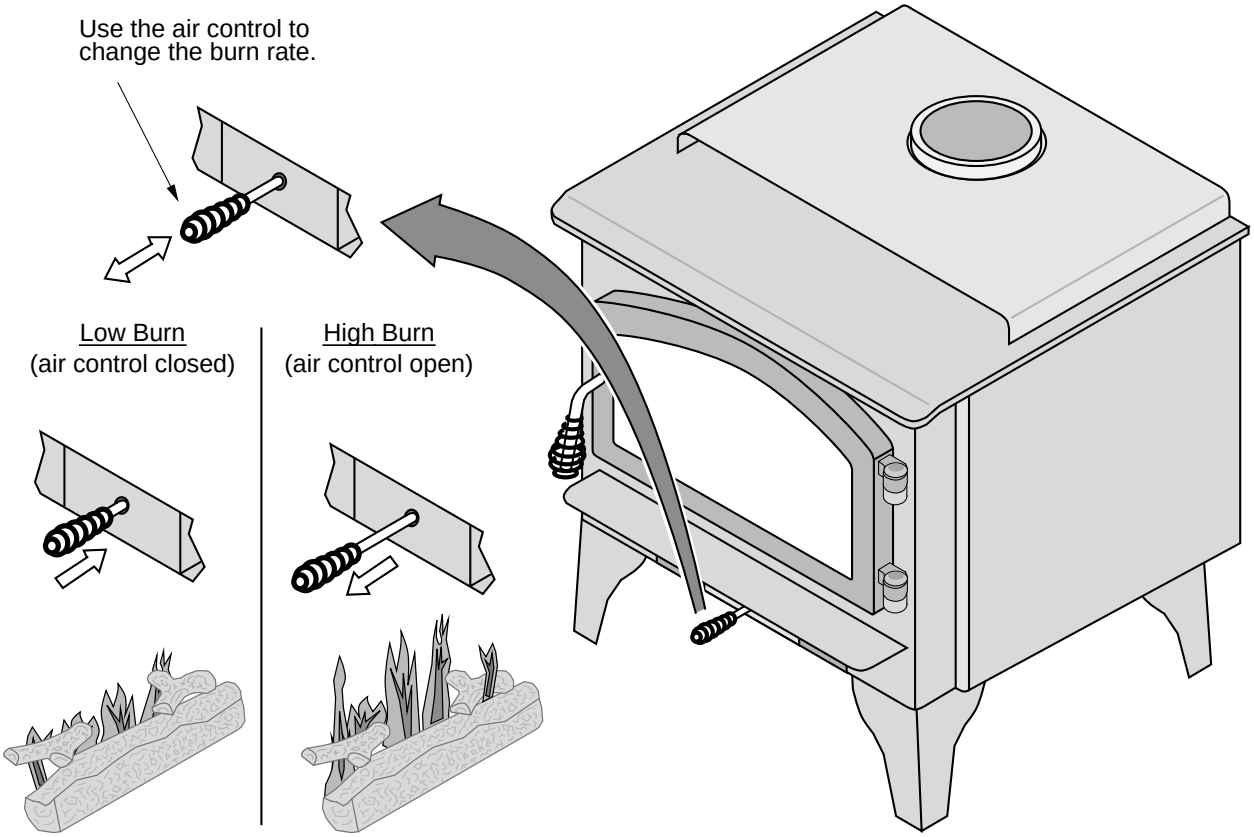

Approximate Air Control Settings

Overnight Burn	Fully in to 1/8" open
Medium Burn	1/8" to 5/8" open
Medium High Burn	5/8" to fully open
High Burn	Fully open (pulled out)

The air control becomes hot during operation - use gloves or a tool to prevent burns.

The air control may take several minutes to influence the burn rate. When making adjustments, you may wish to let the stove burn for 10 minutes to gauge performance.

Understanding Your Heater's Combustion System

This heater uses a dual combustion system detailed below:

Primary Combustion: This is the combustion (fire) that takes place directly on the wood. Primary combustion determines how fast the fire burns. Air for primary combustion is supplied through the air control. When you adjust the air control you control the amount of air that reaches the fire and creates primary combustion. The air control supplies air to the air wash (the air holes above the door opening – used to help clean the glass) and through the pilot orifice (center bottom of the door opening). By using the air control, and supplying air through these two openings, you control primary combustion.

Secondary Combustion: This is the combustion (fire) that does not contact the wood. Secondary combustion burns the visible emissions or smoke that is not consumed during primary combustion. During some phases of combustion you will see secondary combustion. It appears as a glowing flame at the top of the firebox. Air for secondary combustion is supplied by the air tubes at the top of the firebox.

Items to Consider:

- During medium and high burn rates the stove will manage secondary and primary combustion on its own. When the heater is set to a low burn rate more care is needed to ensure the secondary combustion system works properly. Make sure the stove is hot and a good coal bed is established before adjusting your heater to low burn.
- Understanding the combustion system in this heater will help minimize the visible emissions this heater releases into the environment. The primary pilot orifice at the center bottom of the door opening is designed to help the secondary combustion at low burn settings. The pilot provides a small amount of air that burns up through the fuel load providing the heat and flame needed for the secondary system to ignite. The air tubes under the baffle need to remain ignited for low burns to be effective.
- As you load your heater for a low burn, take care in placing the wood. This will affect how well your secondary system works as the wood is consumed. Do not block the pilot orifice. Stack wood so the pilot air can burn its way up between the pieces, helping your heater burn effectively throughout the low fire. This will reduce the visible emissions your heater produces and increase the amount of heat you get from the wood. If you are unsure how well your heater is burning look at the chimney cap to monitor visible emissions.

Burning Your Heater

Starting a Fire: When starting a fire it is imperative to get the heater hot and drafting as quickly as possible. This promotes combustion and reduces emissions. There are many ways to start a fire and you will become adept as you become familiar with the way your heater burns. Before you start, make sure your burn rate setting (air control) is all the way open and the by-pass (if equipped) is open. We suggest that you use a layer of crumpled newspaper covered with a three layers of small kindling, stacked tic tac toe style with approximately ½"-1"gaps between them. Continue to layer wood on top of the kindling with the same air gaps using slightly bigger pieces increasing in size as you stack upward with the final layer being 3-5" diameter pieces loaded on the top. This should fill the firebox. Light the newspaper in several places near the door opening. Shut the door but do not latch it, creating a small opening to allow air to feed the kindling fire. Never leave your heater unattended if your door is not latched shut. While the kindling burns the fire will heat and ignite the larger pieces above. Once the whole load is burning shut and latch the door leaving the burn rate on high. Depending on your heater, the chimney, and the outside environment, you may need to leave your bypass open for up to 20 minutes after lighting the fire. If the fire dies when you shut the bypass you will need to leave it open longer. The presence of a hot coalbed is critical to good combustion. We cannot overstate the importance of a hot coal bed before slowing your burn rate or re-loading your heater. We recommend that you allow the first ignition load of wood to burn through at the high burn rate. This will get your heater up to temperature and establish a coal bed.

Reloading: When reloading a hot heater set the burn rate on high for at least 15 min before slowing it down.

Low Burn: If preparing for an overnight or low burn a longer heat up period may be necessary. Reload the heater full of wood making sure there are air gaps between the wood pieces so the pilot air can burn up through the middle load keeping the secondary combustion system hot and active throughout the burn. After loading, burn the heater on high for at least 15 minutes before setting the air control to low. Excessive creosote buildup (or sooting) in the heater at the end of a low burn signifies that the heater was not hot enough and the wood load was not burned long enough on high after loading before shutting down the air control.

Optional Blower Operation

The blower is available to assist the convection chamber in distributing heat to your home. The directions below detail the options you have with the blower and the best method for operation.

OFF

Turn the dial all the way counter-clockwise until it clicks off.

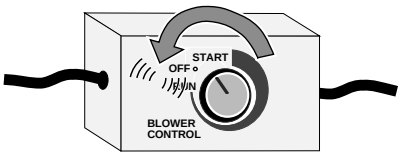

HIGH

The high position is all the way counter-clockwise, **without** clicking off.

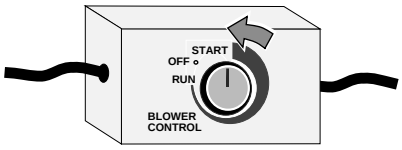

LOW

Turn the dial all the way clockwise.

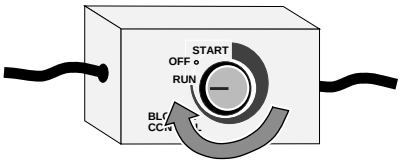

The blower may be used to affect heat output (i.e.: to reduce heat output, turn the blower down).

Route the power cord in a location where it will not come in contact with the appliance or become hot.

Re-Loading the Stove

Follow the directions below to minimize smoke spillage while re-loading the stove.

1 Open the air control all the way (pull it out).

2 Open the door slightly. Let the airflow inside the firebox to stabilize before opening the doors fully.

3 Load wood onto the fire.

Overnight Burn

This stove is large enough to accommodate burn times up to ten hours. Follow the steps below to achieve an overnight burn.

1 Move the air control to high burn and let the stove become hot (burn for approximately 15 minutes).

2 Load as much wood as possible. Use large pieces if possible.

3 Let the stove burn on high for 15 minutes to keep the stove hot, then turn the air control to low.

4 In the morning the stove should still be hot, with embers in the coal bed. Stir the coals and load small pieces of wood to re-ignite the fire, if desired.

Differences if chimney height and draft may lower overall burn times.

Normal Operating Sounds

Creaks and Clicks:

The 3/16" and 1/4" steel may creak or click when the stove heats up and cools down - this is normal.

Blower Sounds:

The blower will make a slight "humm" as it pushes air through the stove.

Hint:

Make sure the leveling bolts on legs are extended - preventing the hearth from amplifying any vibrations.

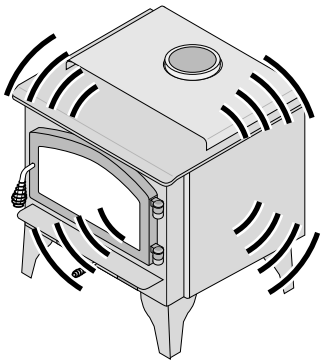

Hints for Burning

- Get the appliance hot before adjusting to low burn
- Use smaller pieces of wood during start-up and high burns to increase temperature
- Use larger pieces of wood for overnight or sustained burns
- Stack the wood tightly together to establish a longer burn
- Be considerate of neighbors & the environment: burn dry wood only
- Burn small, intense fires instead of large, slow burning fires when possible
- Learn your appliance's operating characteristics to obtain optimum performance

Selecting Wood

- Dry Wood is Key
- Dry wood burns hot, emits less smoke and creates less creosote.
- Testing Wood Moisture
- Split wood stored in a dry area will be fully dry within a year. This insures dry wood. If purchasing wood for immediate use, test the wood with a moisture meter. Some experienced wood burners can measure wood moisture by knocking pieces together and listening for a clear "knock" and not a "thud".

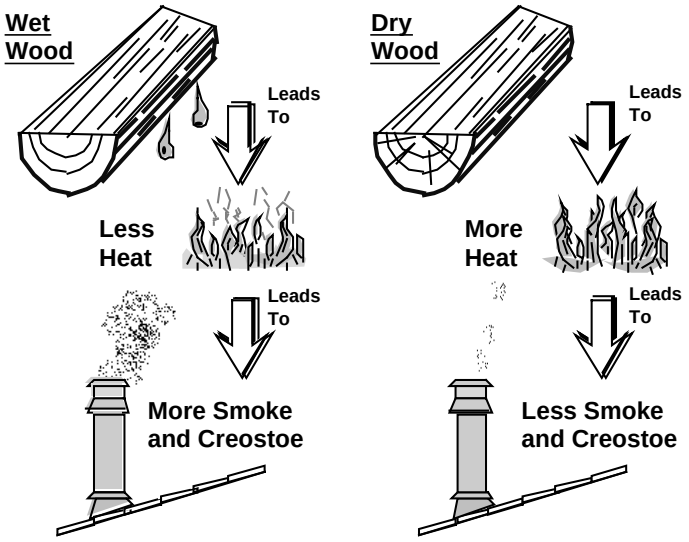

Why Dry Wood is Key

Wet wood, when burned, must release water stored within the wood. This cools the fire, creates creosote, and hampers a complete burn. Ask any experienced wood burner and he or she will agree: dry wood is crucial to good performance.

Wood Cutting and Storage

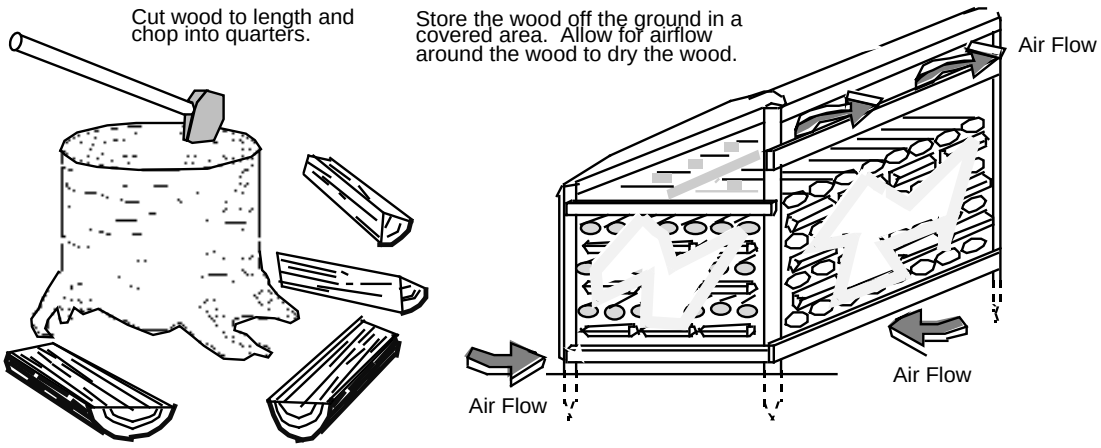

Do Not Burn List

This heater is designed to burn natural wood only. Higher efficiencies and lower emissions generally result when burning air dried seasoned hardwoods, as compared to softwoods or to green or freshly cut hardwoods. DO NOT BURN:

(1) Garbage;

(2) Lawn clippings or yard waste;

(3) Materials containing rubber, including tires;

(4) Materials containing plastic;

(5) Waste petroleum products, paints or paint thinners, or asphalt products;

(6) Materials containing asbestos;

(7) Construction or demolition debris;

(8) Railroad ties or pressure-treated wood;

(9) Manure or animal remains;

(10) Salt water driftwood or other previously salt water saturated materials;

(11) Unseasoned wood; or

(12) Paper products, cardboard, plywood, or particleboard. The prohibition against burning these materials does not prohibit the use of fire starters made from paper, cardboard, saw dust, wax and similar substances for the purpose of starting a fire in an affected wood heater.

Burning these materials may result in release of toxic fumes or render the heater ineffective and cause smoke.

Troubleshooting

Problem	Possible Cause
Smoke Enters Room During Start-Up	• Open the air control (pg. 20). • Cold Air Blockage - burn a piece of newspaper to establish a draft. • If the flame is not getting enough air, a small crack in the door is all that is needed.
Kindling Does Not Start - Fire Smolders	• Open the air control (pg. 20). • Not enough starter paper - use additional newspaper if necessary. • If the flame is not getting enough air, a small crack in the door is all that is needed.
Smoke Enters Room While Re-Loading	• Open the air control before opening the door (pg. 20). • Let the air stabilize before fully opening the door. Then open the door approximately 1 inch. Let air go into the firebox for a few seconds. Once the smoke appears to be flowing up the chimney consistently, open the door. • Insufficient Draft - Chimney height and outside conditions can negatively affect draft. In these cases a small amount of smoke may enter the home. Adding more pipe or a draft-inducing cap may help.
Stove Does Not Burn Hot Enough	• Wood is Wet - see the section "Selecting Wood" on page 23 for details on wood. • Make sure the air control is all the way open. Slide the control back and forth to insure the control is not stuck. • Insufficient Draft - Chimney height and outside conditions can negatively affect draft. In these cases the fire may burn slowly. Adding more pipe or a draft-inducing cap may help.
Blower Does Not Run	• Stove is Not Up to Temperature - This is normal. The blower will come on when the stove is hot - usually 15 to 30 minutes. • Electricity is Cut to the Blower - Check the household breaker or fuse to make sure it is operable.
Stove Does Not Burn Long Enough	• Depending upon wood, draft, and other factors, the burn time may be shorter then stated. Make sure the doors are sealing and not allowing air into the firebox - See the section "Door and Glass Inspection" on page 27 for details. • Check the ash bed for coals. Often, coals are still glowing under a slight bed of flyash. By raking these into a pile you can re-start your stove quickly.

Failure to properly maintain and inspect your appliance may reduce the performance and life of the appliance, void your warranty, and create a fire hazard.

Daily Maintenance (while stove is in use)

Remove Ash (if necessary)

Whenever ashes get *3* to *4* inches deep in your firebox or ash pan, and when the fire has burned down and cooled, remove excess ashes. Leave an ash bed approximately *1* inch deep on the firebox bottom to help maintain a hot charcoal bed. Let the stove cool completely before removing ashes (wait at least two hours after the last coal has extinguished). Ashes should be placed in a metal container with a tight-fitting lid. The closed container of ashes should be placed on a noncombustible floor or on the ground, away from all combustible materials, pending final disposal. The ashes should be retained in the closed container until all cinders have thoroughly cooled.

- Follow the directions below to remove ash.
  1. Let the stove cool completely (at least two hours after the last coal has extinguished).
  2. Place a cloth or cardboard protector over the hearth to catch ash and protect against scratching.
  3. Open the doors and scoop the ash into a metal container with a tight fitting lid. The closed container of ashes should be placed on a noncombustible floor or on the ground, away from all combustible materials, pending final disposal.

Improperly disposed ashes lead to fires. Hot ashes placed in cardboard boxes, dumped in back yards, or stored in garages, are recipes for disaster.

Wood-burning stoves are inherently dirty. During cleaning have a vacuum ready to catch spilled ash (make sure ash is entirely extinguished).

There are vacuum cleaners specifically made to remove ash (even if the ash is warm). Contact your dealer for details.

Clean the Glass (if necessary)

This appliance has an airwash to keep the glass clean. However, burning un-seasoned wood or burning on lower burn rates leads to dirtier glass (especially on the sides). Clean the glass by following the directions below.

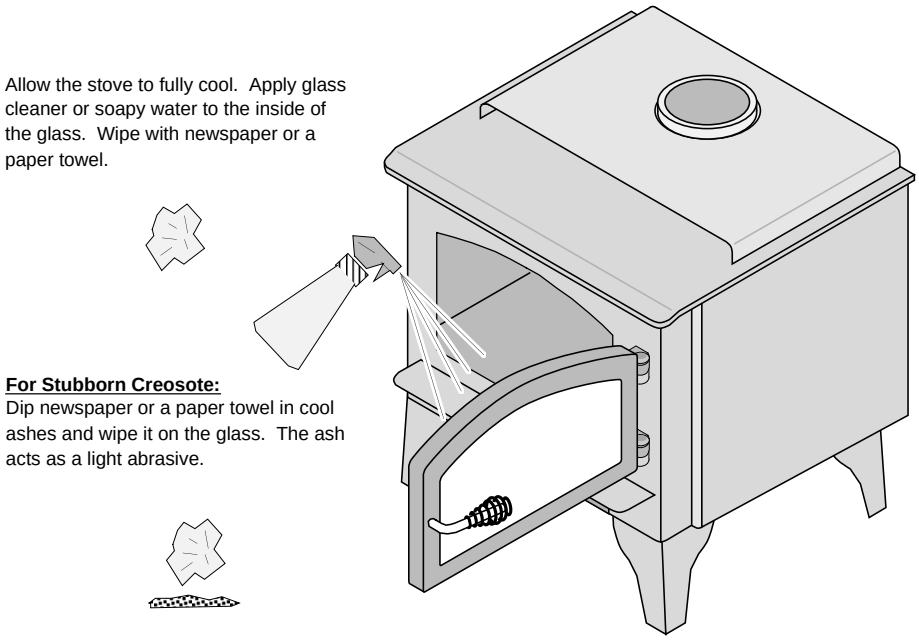

The glass will develop a very slight haze over time. This is normal and will not affect viewing of the fire.

Monthly Maintenance (while appliance is in use)

Make sure the appliance has fully cooled prior to conducting service.

Door and Glass Inspection

The door must form an air-tight seal to the firebox for the stove to work correctly. Inspect the door gasket to make sure it forms an air-tight seal to the firebox.

The door can be lifted off the hinges if extensive repairs are conducted.

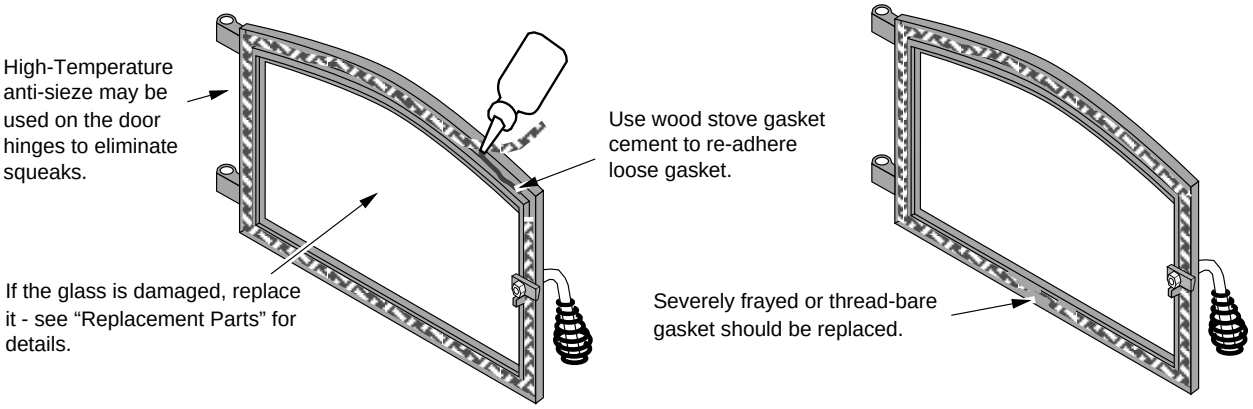

Door Cam Adjustment

The door cam should be tight enough to pull the door against the face of the stove yet not so tight as to not allow full handle rotation. To tighten the door cam, remove the door handle and remove one of the washers between the door frame and cam (the washer may be stored for future use by placing it between the cam and nut). To loosen the door cam, add a washer between the door frame and cam.

NOTE: Older models use 7 washers between the door & cam. Newer models use 1 bushing & 3 washers.

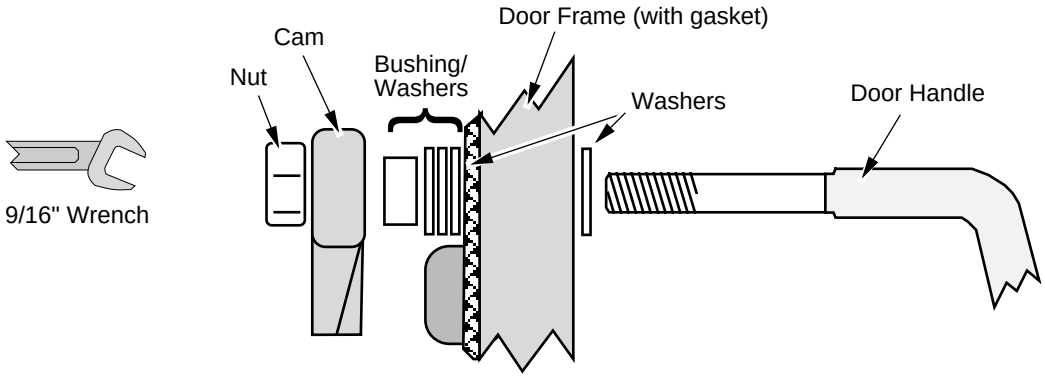

Creosote - Formation and Need for Removal

When wood is burned slowly, it produces tar and other organic vapors, which combine with expelled moisture to form creosote. The creosote vapors condense in the relatively cool chimney flue of a slow-burning fire. As a result, creosote residue accumulates on the flue lining. When ignited, this creosote makes an extremely hot fire. The chimney and chimney connector should be inspected at least once every two months during the heating season to determine if a creosote buildup has occurred. If creosote has accumulated, it should be removed to reduce the risk of a chimney fire.

If you are not certain of creosote inspection, contact your dealer or local chimney sweep for a full inspection. Excess creosote buildup may cause a chimney fire, that may result in property damage, injury, or death.

Yearly Maintenance

Make sure the appliance has fully cooled prior to conducting service.

Touch Up Paint

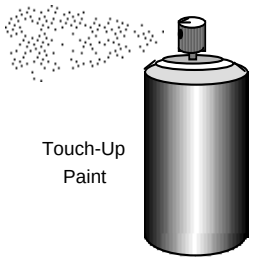

Included with the owner's pack of this appliance is a can of Stove-Brite® paint. To touch up nicks or dulled paint, apply the paint while the appliance is cool. Sand rusted or damaged areas before preparation (use 120 grit sandpaper). Clean and dry the area to prepare the surface. Wait at least one hour before starting the appliance. The touched up area will appear darker than the surrounding paint until it cures from heat. Curing will give off some fumes while curing – open windows to ventilate.

Cleaning the Air Duct and Blower (if applicable)

Use a vacuum to clean the air ducts (channels). This prevents dust from burning and creating odors.

The optional blower should be vacuumed every year to remove any buildup of dust, lint, etc.

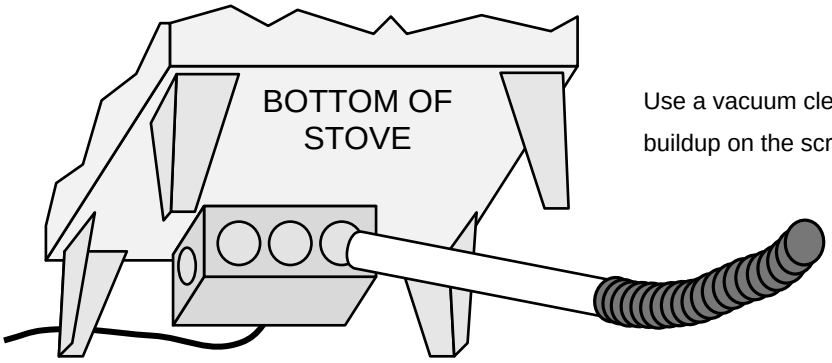

Use a vacuum cleaner to remove any buildup on the screens of the blower.

Firebrick and Baffle Inspection

Use the illustration on page 30 as a reference for checking the following items. Make sure the appliance is cool before proceeding.

Baffle Firebricks - check the bricks along the ceiling of the firebox to make sure they are intact and have no gaps between them. Slide the bricks to eliminate any gaps.

Baffle Supports - make sure the front and back baffle supports in are place and not degraded. Slight scaling or rusting of the metal is normal.

Secondary Air Tubes - Check the two air tubes and collars to make sure they are intact and not severely deteriorated. Slight scaling or rusting of the metal is normal. Make sure the push pins hold the air tubes in place.

Floor and Wall Firebricks - replace any severely damaged firebrick along the side or floor of the firebox.

Door Parts

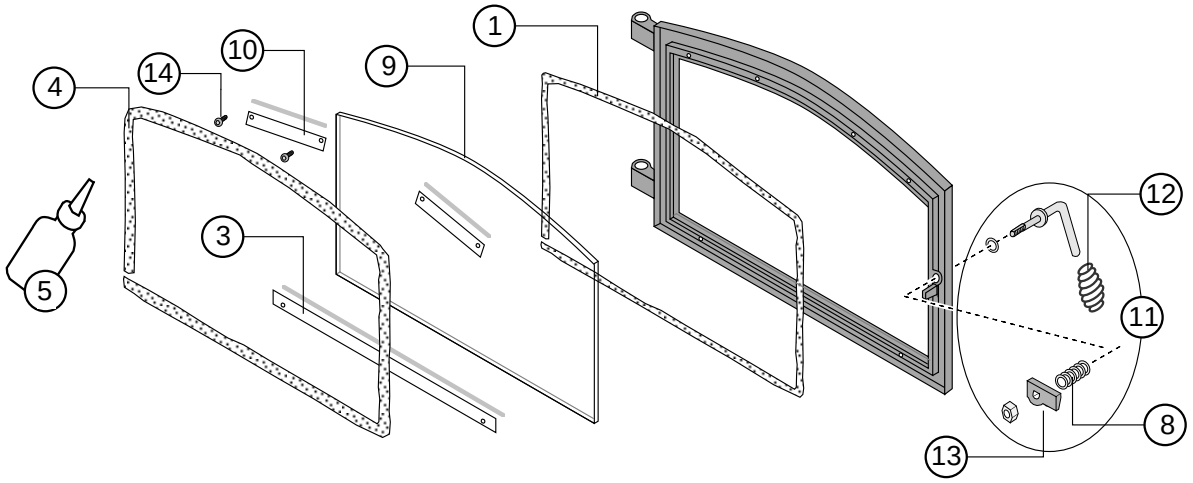

ID #	Description	Qty	Part #		ID #	Description	Qty	Part #
1	Glass Gasket	1	250-00173		4	Door Gasket	1	250-00170
3	Glass Clip w Gasket– 3 Hole	2/1	250-00174		8	Door Washer	1	250-00364
5	RTV High Temp. 600° Silicone				10	Glass Clip w Gasket– 2 Hole	1	250-00175
9	Lopi Glass	1	250-00172		12	Lopi Door Handle (spring)	1	250-00373
11	Lopi Door Handle Asbly	1	250-00171		14	Screws (8) 8-32 x 1/2” Torx	1	225-20039
13	Door Cam	1	250-00598					

Replacing the Glass

The glass must not contact the door or glass clips directly. The glass gasket and glass clip gaskets insulate the glass to prevent cracking. Do not over-tighten the glass clips.

Place the door front side down. Insert the glass gasket into the groove along the inside perimeter of the door. Place the glass on top of the gasket and secure with the glass clips.

Replacing the Door Gasket

The door gasket inserts into the outer groove of the door and is secured with RTV high-temperature 600° silicone. Before installing, remove any residual silicone. Lay the gasket in place (start at the lower left corner) and cut off any excess gasket (do not stretch the gasket. The cement fully cures with heat from the stove. You may need to open and close the door repeatedly to get the gasket to seat fully.

Replacing the Door Handle

See the illustration above for a component list (see pg. 27 for details on adjusting the door).

Firebox Parts

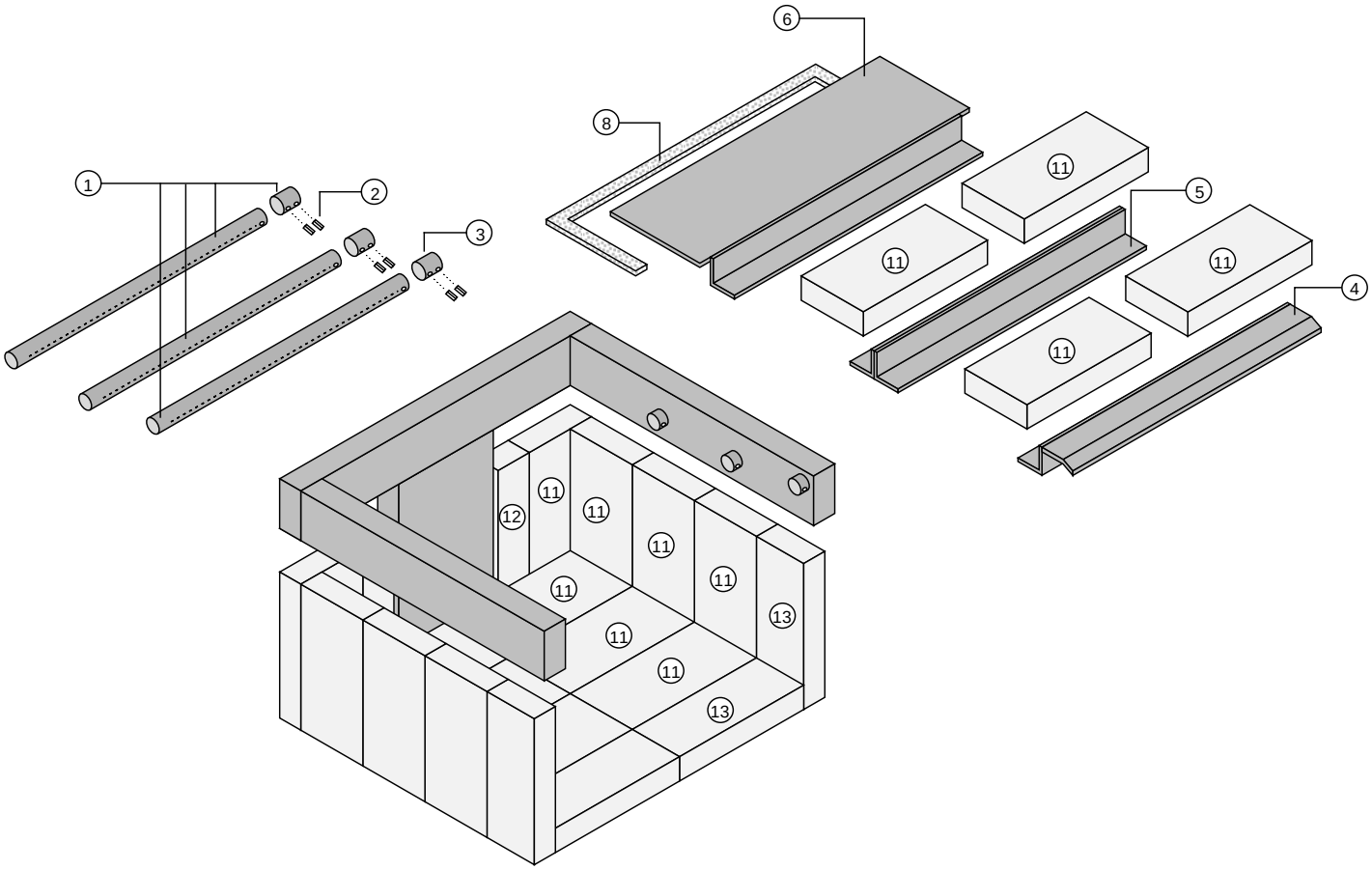

ID #	Description	Qty	Part #		ID #	Description	Qty	Part #
1	Air Tubes & Sleeve	1	98900233		2	Air Tube Roll Pins	6	98900357
3	Air Tube Retainer Sleeve	3	98900356		4	Baffle Support, Front	1	99900251
5	Baffle Support, Rear	1	99900250		6	Baffle Plate	1	250-00203
					8	Gasket, Baffle Plate	1	91001701
11	Brick - 9" x 4.5" un-cut	18	175-00001 (1) 98900102 (9)		12	Brick, Cut - 9"x 2"	2	251-00021
13	Brick, Cut – 9” x 3.687	4	251-00022					

Floor and Side Firebrick Removal & Replacement

Do not pry firebrick - they chip and crack easily. Remove the floor firebricks first. The side firebrick are removed later because they are pinned in place by the floor firebrick. Clean the firebox prior to replacing the firebrick.

Air Tube Removal & Replacement

The first tube has slightly larger holes. The rear and middle tubes are identical.

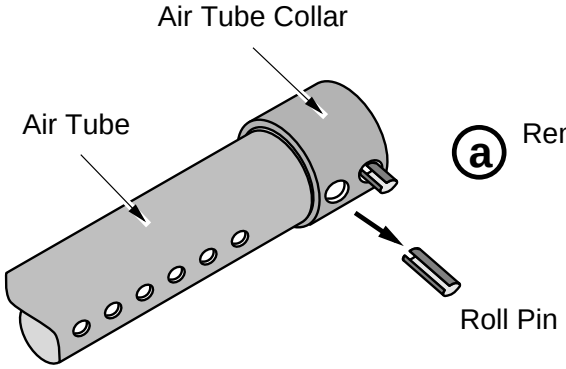

ⓐ Remove the left pin on the air tube collar

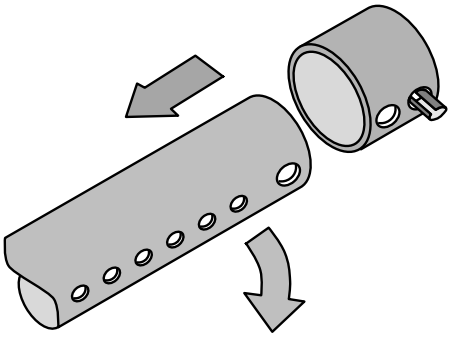

ⓑ Slide the air tube to the left, swing it down and remove from the firebox.

Baffle Removal & Replacement

1 Push the front firebricks up and feed them forward, guiding them out the door. Repeat for the rear firebricks.

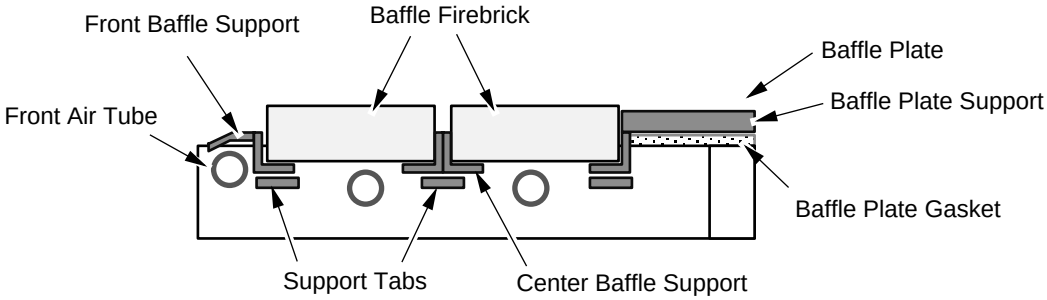

2 The baffle supports rest on support tabs.

3 The baffle plate is difficult to remove and should only be removed if necessary. Remove the rear secondary air tube. Slide the baffle plate forward and rotate it downwards (the baffle plate fits very snug inside the firebox and is very heavy, making it difficult to remove). The baffle plate gasket rests on the side and rear air channels. Try not to damage it when removing the bypass holder.

Limited 5 Year Warranty

Register your TRAVIS INDUSTRIES, INC. Limited 5 Year Warranty online at **traviswarranty.com.** TRAVIS INDUSTRIES, INC. warrants this gas appliance (appliance is defined as the equipment manufactured by Travis Industries, Inc.) to be defect-free in material and workmanship to the original purchaser from the date of purchase as follows:

Check with your dealer in advance for any costs to you when arranging a warranty call.
Mileage or service charges are not covered by this warranty. This charge can vary from store to store.

Years 1 & 2 - COVERAGE: PARTS & LABOR

- Firebox Assembly:
  Firebox, Baffle Supports, Air Tubes, Air Channels, Convection Chamber
- Door Assembly:
  Cast Door, Latch Assembly, Glass Retainers
- Air Control Assembly
  Slider Plate, Pressure Plate
- Ceramic Glass
  Glass (breakage from thermal shock)
- Firebrick
  Breakage from thermal shock
- Accessories
  Legs, Pedestal, Blower
- Re-Installation Allowance
  In cases where heater must be removed from home for repairs, a partial cost of re-installation is covered (pre-authorization required)
- One-Way Freight Allowance
  One-way freight allowance on pre-authorized repair done at factory is covered.

Exclusions: Paint, Gasketing

Years 3 THROUGH 5 - COVERAGE: PARTS & LABOR

- Firebox Assembly:
  Firebox, Baffle Supports, Air Tubes, Air Channels, Convection Chamber
- Air Control Assembly
  Slider Plate, Pressure Plate
- Door Assembly:
  Cast Door, Latch Assembly, Glass Retainers
- One-Way Freight Allowance
  One-way freight allowance on pre-authorized repair done at factory is covered.

Exclusions: Paint, Gasketing, Accessories (Legs, Pedestal, Panels, Blower), Glass, Firebrick, Re-Installation Allowance

CONDITIONS & EXCLUSIONS

1. This new appliance must be installed by a qualified installer. It must be installed, operated, and maintained at all times in accordance with the instructions in the Owner's Manual. Any alteration, willful abuse, accident, neglect, or misuse of the product shall nullify this warranty.
2. This warranty is nontransferable, and is made to the ORIGINAL purchaser, provided that the purchase was made through an authorized Travis dealer.
3. Discoloration and some minor expansion, contraction, or movement of certain parts and resulting noise, is normal and not a defect and, therefore, not covered under warranty.
4. This warranty does not cover misuse of the stove. Misuse includes over-firing (operation where the connector or stove may glow red) of this appliance can cause serious damage and will nullify this warranty. Misuse includes use of salt saturated wood, chemically treated wood, or any fuel not recommended in the manual.
5. Damage to the stove due to improper break-in procedures (see manual for proper break in).
6. The salt air environment of coastal areas or a high humidity environment can be corrosive to the castings. These conditions can be corrosive and can cause the cast iron to rust. This warranty does not cover any damage caused by a salt air or high humidity environment.
7. Damage to the appliance while it is in transit is not covered by this warranty, but is subject to a claim against the common carrier.
8. The warranty, as outlined within this document, does not apply to the chimney components or other Non-Travis accessories used in conjunction with the installation of this product. If in doubt as to the extent of this warranty, contact your authorized Travis retailer before installation.
9. Travis Industries will not be responsible for inadequate performance caused by environmental conditions such as nearby trees, buildings, roof tops, wind, hills or mountains or negative pressure or other influences from mechanical systems such as furnaces, fans, clothes dryers, etc.
10. This Warranty is void if:
    a. The appliance has been operated in atmospheres contaminated by chlorine, fluorine or other damaging chemicals.
    b. The appliance is subject to submersion in water or prolonged periods of dampness or condensation.
    c. Any damage to the appliance, combustion chamber, heat exchanger or other components due to water, or weather damage which is the result of, but not limited to, improper chimney/venting installation.
11. Exclusions to this 5 Year Warranty include: injury, loss of use, damage, failure to function due to accident, negligence, misuse, improper installation, alteration or adjustment of the manufacturer's settings of components, lack of proper and regular maintenance, damage incurred while the appliance is in transit, alteration, or act of God.
12. This 5 Year warranty excludes damage caused by normal wear and tear, such as paint discoloration or chipping, worn or torn gasketing, chipped or cracked firebrick, etc. Also excluded is damage to the appliance caused by abuse, improper installation, modification of the appliance, or the use of fuel other than that for which the appliance is configured (use cord wood only).
13. Damage to brass or plated surfaces caused by fingerprints, scratches, melted items, or other external sources left on the surfaces from the use of abrasive cleaners is not covered in this warranty. Damage to the surfaces from over-firing (operation where the steel may glow red) is not covered in this warranty.
14. TRAVIS INDUSTRIES, INC. is free of liability for any damages caused by the appliance, as well as inconvenience expenses and materials. Incidental or consequential damages are not covered by this warranty. In some states, the exclusion of incidental or consequential damage may not apply.
15. This warranty does not cover any loss or damage incurred by the use or removal of any component or apparatus to or from the Travis appliance without the express written permission of TRAVIS INDUSTRIES, INC. and bearing a TRAVIS INDUSTRIES, INC. label of approval. This warranty does not cover a stove repaired by someone other than a Travis Industries authorized dealer.
16. Any statement or representation of Travis products and their performance contained in Travis advertising, packaging literature, or printed material is not part of this 5 year warranty.
17. This warranty is automatically voided if the appliance's serial number has been removed or altered in any way. If the appliance is used for commercial purposes, it is excluded from this warranty.
18. No dealer, distributor, or similar person has the authority to represent or warrant Travis products beyond the terms contained within this warranty. TRAVIS INDUSTRIES, INC. assumes no liability for such warranties or representations.
19. Travis Industries will not cover the cost of the removal or re-installation of hearths, facing, mantels, venting or other components.
20. If for any reason any section of this warranty is declared invalid, the balance of the warranty remains in effect and all other clauses shall remain in effect.
21. This 5 year warranty is the only warranty supplied by Travis Industries, Inc., the manufacturer of the appliance. All other warranties, whether express or implied, are hereby expressly disclaimed and purchaser's recourse is expressly limited to the warranties set forth herein.

IF WARRANTY SERVICE IS NEEDED:

1. If you discover a problem that you believe is covered by this warranty, you MUST REPORT it to your Travis dealer WITHIN 30 DAYS, giving them proof of purchase, the purchase date, and the model name and serial number.
2. Travis Industries has the option of either repairing or replacing the defective component.
3. If your dealer is unable to repair your appliance's defect, he may process a warranty claim through TRAVIS INDUSTRIES, INC., including the name of the dealership where you purchased the appliance, a copy of your receipt showing the date of the appliance's purchase, and the serial number on your appliance. At that time, you may be asked to ship your appliance, freight charges prepaid, to TRAVIS INDUSTRIES, INC. TRAVIS INDUSTRIES, INC., at its option, will repair or replace, free of charge, your appliance if it is found to be defective in material or workmanship within the time frame stated within this 5 year warranty. TRAVIS INDUSTRIES, INC. will return your appliance, freight charges (years 1 to 3) prepaid by TRAVIS INDUSTRIES, INC., to your regional distributor, or dealership.
4. Check with your dealer in advance for any costs to you when arranging a warranty call. Mileage or service charges are not covered by this warranty. This charge can vary from store to store.
5. Any appliance or part thereof that is repaired or replaced during the limited warranty period will be warranted under the terms of the limited warranty for a period not to exceed the remaining term of the original limited warranty or six(6) months, whichever is longer.

Page 2 of 2

Listing Label

The listing label (safety label) is attached to the back of the stove. A copy is shown below.

DO NOT REMOVE THIS LABEL

CONTACT LOCAL BUILDING OR FIRE OFFICIALS ABOUT INSTALLATION AND RESTRICTIONS IN YOUR AREA.
SUITABLE FOR USE IN CONVENTIONAL RESIDENTIAL INSTALLATIONS, MANUFACTURED HOMES AND ALCOVES.

Intertek
Report No. B0509PRT-001
Control No. 4000515

MODEL:
1750
Certified for USA and Canada

SERIAL NO:

CONFORMS TO UL STD 1482; CERTIFIED TO ULC STD S627-1993

PREVENT HOUSE FIRES - Install and use only in accordance with the manufacturer's installation and operating instructions. Contact your local building or fire officials about restrictions and installation inspection in your area. Refer to local building codes and manufacturer's instructions for precautions required for passing a chimney through a combustible wall or ceiling. Do not run a chimney connector through a combustible wall or ceiling. Do not connect this unit to a chimney flue serving another appliance. Clearances may be reduced by methods specified in NFPA 211, listed wall shields, pipe shields, or other means approved by local building or fire officials.

FREESTANDING INSTALLATION

STANDARD RESIDENTIAL FREESTANDING INSTALLATIONS REQUIRE: 6" diameter, minimum 24 MSG black, with listed UL-103 HT factory-built chimney, suitable for use with solid fuels or masonry chimney. Pedestal or legs are required.

ALCOVE INSTALLATIONS REQUIRE: One of the Listed doublewall connectors listed below. Pedestal or legs are required.

MANUFACTURED HOME AND REDUCED CLEARANCE INSTALLATIONS REQUIRE: One of the Listed doublewall connectors listed below. In addition, manufactured home installations require outside air - use the optional pedestal or outside air boot.

- AMERI-TEC model DCC connector with model HS chimney
- DURA-VENT model DVL connector with DURA-PLUS chimney
- GSW-JAKES EVANS SUPERPIPE 2100
- I.C.C. EXCEL (103-HT) chimney with HP connector
- METALFAB model DW connector with TG chimney
- OLIVER MACLEOD PROVENT model PV connector with model 3103 chimney
- SECURITY model DP connector with SECURITY model ASHT or S2100 chimney
- SELKIRK METALBESTOS model DS connector with model SSII chimney
- OLYMPIA VENTIS® with Ventis doublewall black stove pipe

Minimum Clearances To Combustibles And Hearth Requirements:	Singlewall Connector Conventional Residential Installations	Alcove, Manufactured Home and Reduced Clearance Conventional Residential Installations
A.	15 in. / 381 mm	13 in. / 331 mm
B.	15 in. / 381 mm	4.25 in. / 108 mm
C.	15 in. / 381 mm	6.5 in. / 166 mm
D.	24 in. / 610 mm	21.5 in. / 547 mm
E.	17.75 in. / 451 mm	6.5 in. / 166 mm
F.	24 in. / 610 mm	15 in. / 381 mm
G.	US: 6 in. (153 mm) / CAN: 8 in. (204 mm)	US: 6 in. (153 mm) / CAN: 8 in. (204 mm)
H.	US: 16 in. (407 mm) / CAN: 18 in. (458 mm)	US: 16 in. (407 mm) / CAN: 18 in. (458 mm)

FREESTANDING CLEARANCE DIAGRAM

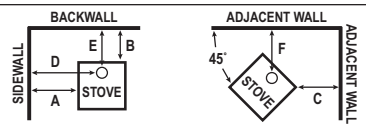

ALCOVE SPECIFICATIONS

Max. Alcove Depth:	48 in. (1220 mm)
Min. Alcove Height:	See Owner's Manual
Min. Alcove Width:	See Owner's Manual

FLOOR PROTECTION DIAGRAM

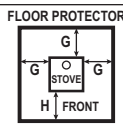

Floor protection must be a non-combustible material extending beneath the heater and to the front, sides and back as indicated. See Owner's Manual for examples of non-combustible materials that can be used. Do not obstruct space beneath heater.

Electrical Rating: 115V., 60 Hz, 1.8 Amps
Optional Blower: # 99000138

Do not route power cord under or in front of appliance.

Replace glass only with 5mm neoceramic or ceramic glass.

TRAVIS INDUSTRIES
HOUSE OF FIRE

Manufactured by:
TRAVIS INDUSTRIES, INC.
12521 Harbour Reach Drive
Mukilteo, WA 98275
www.travisproducts.com

U.S. ENVIRONMENTAL PROTECTION AGENCY
Certified to comply with 2015 particulate emission standards. Not approved for sale after May 15, 2020. 1.9 g/h, Method 28, 5H, 2015

DATE OF MANUFACTURE

2015	2016	2017	2018	Jan	Feb	Mar	Apr	May	Jun	Jul	Aug	Sep	Oct	Nov	Dec

Made in U.S.A.

0925

Rear Blower Installation (Part # 99000138)

The rear blower improves heat transfer by pushing heated air through the convection channel. Operating instructions are described in the section "Blower Operation".

ⓐ Remove these two knock-outs on the bottom of the stove (use a screwdriver to pry them out).

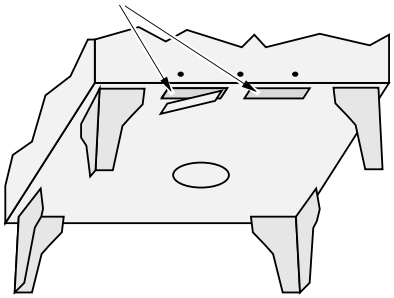

ⓑ Place the snap disk assembly over the snap disk extender (included with the stove) and bend these tabs to secure.

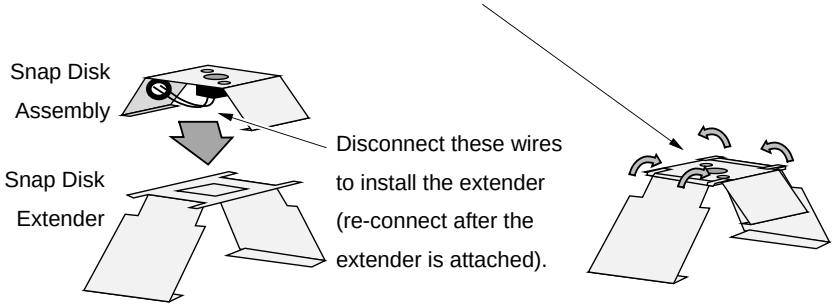

ⓒ Wedge the snap disk into the convection channel so. Bend the legs on the extender, if necessary, so the snap disk contacts the firebox.

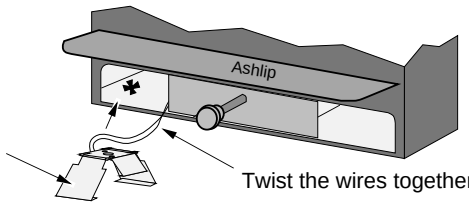

Twist the wires together, feed them through the convection chamber, out the knockout, and attach to the leads on the blower.

ⓕ Attach the blower to the stove with the three screws included with the blower.

3/8" Wrench

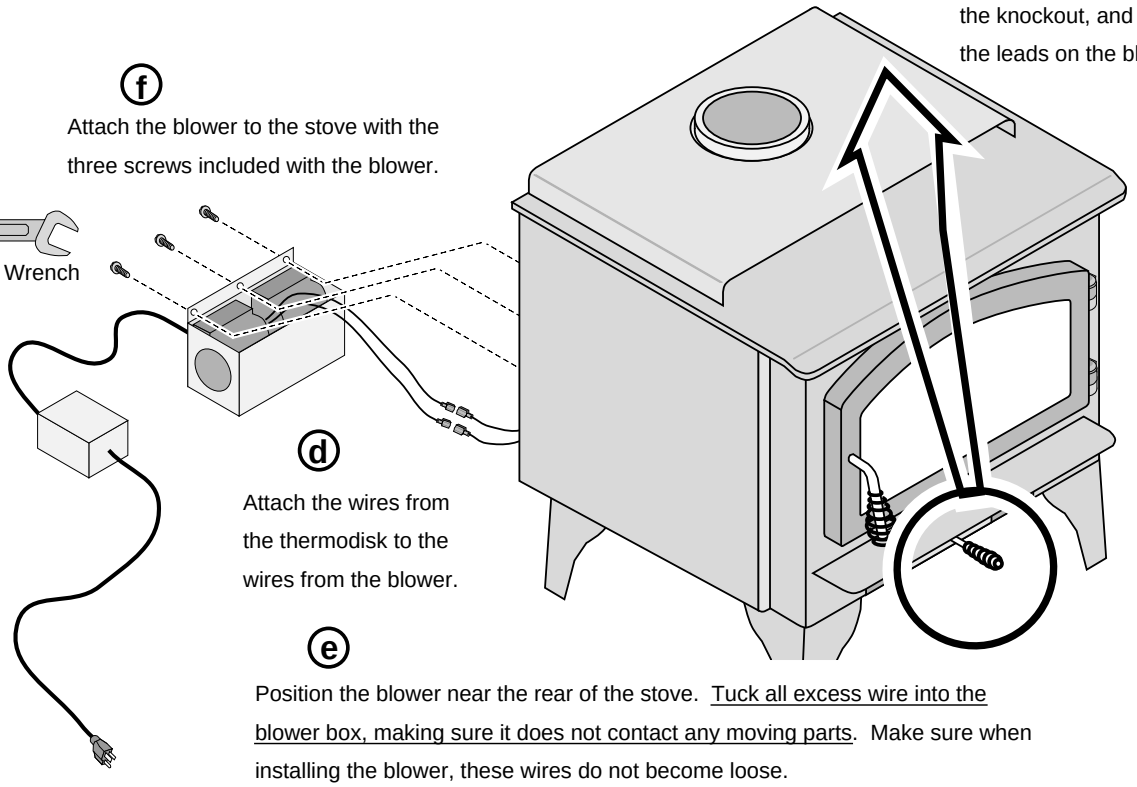

ⓓ Attach the wires from the thermodisk to the wires from the blower.

ⓔ Position the blower near the rear of the stove. <u>Tuck all excess wire into the blower box, making sure it does not contact any moving parts</u>. Make sure when installing the blower, these wires do not become loose.

ⓖ Plug the blower in. Do not route the power cord under or over the stove or in a location where it may become damaged.

Air Control (Adjusting the Burn Rate) 20
Alcove Installation Requirements 13
Ash Removal 21
Ash Removal 26
Blower Cleaning (if applicable) 28
Blower Installation 35
Blower Operation 22
Brick Removal & Replacement 30
Burn Rate 20
Cathedral Ceiling with a Factory Built Chimney 15
Chimney Connector Requirments 10
Chimney Requirements 11
Chimney Termination Requirements 12
Clearances 8
Corner Installation (Top View) 9
Creosote - Formation and Need for Removal 27
Curing the Paint 18
Daily Maintenance (while stove is in use) 26
Door and Glass Inspection 27
Door Gasket Replacement 29
Door Handle Replacement 29
Door Parts 29
Doors (Opening the Doors) 19
Features & Specifications 6
Firebox Parts 30
First Fire 18
Floor Protection Requirements 8
Glass Cleaning 26
Glass Replacement 29
Hearth (Floor Protection Requirements) 8
Hearth Stove Direct Connection 17
Hearth Stove Positive Connection 16
Hints for Burning 23
Interior or Exterior Masonry Chimney 17
Introduction & Important Information 2
Listing Information 34
Loading (Re-Loading the Stove) 22
Mobile Home Requirements 14
Monthly Maintenance (while appliance is in use) 27
Opening the Doors 19
Outside Air Requirements 12
Over-Firing the Stove 18
Overnight Burn 22
Paint (Touch Up Paint) 28
Paint Smell (Curing the Paint) 18
Planning the Installation 7
Preparation for Installation 7
Safety Label 34
Safety Precautions 4
Sounds 22
Specifications 6
Standard Ceiling with a Factory Built Chimney 15
Starting a Fire 19
Stove Installation Considerations 7
Stove Placement Requirements 8
Top View - Corner Installation 9
Top View - Straight Installation 9
Troubleshooting 24
Warnings (Safety Precautions) 4
Warranty 34
Wood (Selecting Wood) 23
Yearly Maintenance 28