Installation Manual

Installation and Appliance Setup

INSTALLER: Leave this manual with party responsible for use and operation.
OWNER: Retain this manual for future reference.

***NOTICE: DO NOT** discard this manual!*

HEAT&GLO
No one builds a better fire

Models:

TRUE-36G-IFT
TRUE-36TG-IFT
TRUE-36S-IFT
TRUE-42G-IFT
TRUE-42TG-IFT
TRUE-42S-IFT
TRUE-50TG-IFT
TRUE-50S-IFT

GAS-FIRED
c UL us
LISTED

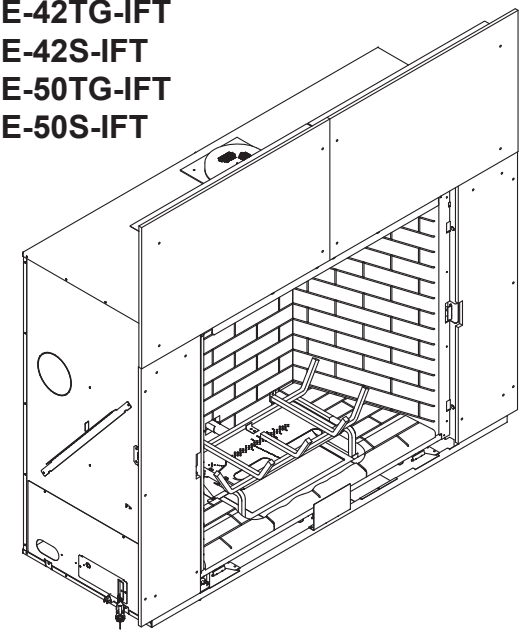

This appliance may be installed as an OEM installation in manufactured home (USA only) or mobile home and must be installed in accordance with the manufacturer's instructions and the *Manufactured Home Construction and Safety Standard, Title 24 CFR, Part 3280* in the United States, or the *Standard for Installation in Mobile Homes, CAN/CSA Z240 MH Series,* in Canada.

This appliance is only for use with the type(s) of gas indicated on the rating plate. This appliance is not convertible for use with other gases, unless a certified kit is used.

➔ Pour demander un exemplaire en français de ce manuel d'installation, visitez www.heatnglo.com.

⚠ WARNING:
FIRE OR EXPLOSION HAZARD
Failure to follow safety warnings exactly could result in serious injury, death, or property damage.

- **DO NOT** store or use gasoline or other flammable vapors and liquids in the vicinity of this or any other appliance.
- **What to do if you smell gas**
  - **DO NOT** try to light any appliance.
  - **DO NOT** touch any electrical switch. **DO NOT** use any phone in your building.
  - Leave the building immediately.
  - Immediately call your gas supplier from a neighbor's phone. Follow the gas supplier's instructions.
  - If you cannot reach your gas supplier, call the fire department.
- Installation and service must be performed by a qualified installer, service agency, or the gas supplier.

⚠ DANGER

HOT GLASS WILL CAUSE BURNS.

DO NOT TOUCH GLASS UNTIL COOLED.

NEVER ALLOW CHILDREN TO TOUCH GLASS.

A barrier designed to reduce the risk of burns from the hot viewing glass is provided with this appliance and must be installed for the protection of children and other at-risk individuals.

In the Commonwealth of Massachusetts installation must be performed by a licensed plumber or gas fitter.

See Table of Contents for location of additional Commonwealth of Massachusetts requirements.

⚠ Safety Alert Key:

- ***DANGER!*** *Indicates a hazardous situation which, if not avoided will result in death or serious injury.*
- ***WARNING!*** *Indicates a hazardous situation which, if not avoided could result in death or serious injury.*
- ***CAUTION!*** *Indicates a hazardous situation which, if not avoided, could result in minor or moderate injury.*
- ***NOTICE:*** *Used to address practices not related to personal injury.*

Note: *The term "recommend" or "recommended" does not indicate a requirement. It is a best practice suggested by Hearth & Home Technologies®.*

Table of Contents

Installation Standard Work Checklist 3

1 Product Specific and Important Safety Information

A. Appliance Certification 4
B. Glass Specifications 4
C. BTU Specifications 4
D. High Altitude Installations 4
E. Non-Combustible Materials Specification 4
F. Combustible Materials Specification 4
G. Electrical Codes 4
H. California 4
I. Requirements for the Commonwealth of Massachusetts . . 5

2 Getting Started

A. Design and Installation Considerations 6
B. Good Faith Wall Surface 6
C. Tools and Supplies Needed 6
D. Inspect Appliance and Components 7

3 Framing and Clearances

A. Appliance/Decorative Front Dimension Diagrams 8
B. Clearances to Combustibles 13
C. Constructing the Appliance Chase 17
D. Hearth Extension 18

4 Termination Location and Vent Information

A. Vent Termination Minimum Clearances 19
B. Chimney Diagram 20
➔ C. Approved Pipe 21
D. Use of Elbows 21
E. Measuring Standards 22
F. Vent Diagrams 23
G. PVLP-SLP and PVI-SLP-B Information 30

5 Vent Clearances and Framing

A. Pipe Clearances to Combustibles 31
B. Wall Penetration Framing/Firestops 31
C. Ceiling Firestop/Floor Penetration Framing 32
D. Install Attic Insulation Shield 32
E. Prepare for Heat Management 33

6 Appliance Preparation

A. Vent Collar Preparation 34
B. Securing and Leveling the Appliance 35
C. Installing Non-Combustible Facing Material 36

7 Venting and Chimneys

A. Assemble Vent Sections 37
B. Secure the Vent Sections 38
C. Disassemble Vent Sections 38
D. Vertical Termination Requirements 39
E. Horizontal Termination Requirements 40

8 Electrical Information

A. General Information 41
B. Wiring Requirements 43

9 Gas Information

A. Fuel Conversion 44
B. Gas Pressure 44
C. Gas Connection 44
D. High Altitude Installations 44
E. Air Shutter Setting 45

10 Finishing

A. Facing Material 46
B. Finishing Templates 47
C. Mantel and Wall Projections 49
D. Decorative Front Dimensions for Finishing 51

11 Appliance Setup

A. Fixed Glass Assembly 52
B. Remove the Shipping Materials 54
C. Clean the Appliance 54
D. Install Glass Refractory (TRUE-36G-IFT/TRUE-42G-IFT Only) 55
E. Install Teco-Sil and Mystic Embers 58
F. Glowing Ember Placement 59
G. LED's 59
H. Install the Log Assembly 60
I. IntelliFire Touch® Control System Setup 66
J. Install Decorative Front 66

12 Reference Materials

A. Vent Components Diagrams 67
B. Accessories 74

➔ = Contains updated information.

Installation Standard Work Checklist

ATTENTION INSTALLER:
Follow this Standard Work Checklist

This standard work checklist is to be used by the installer in conjunction with, not instead of, the instructions contained in this installation manual.

Customer: _____ **Date Installed:** _____
Lot/Address: _____ **Location of Fireplace:** _____
_____ **Installer:** _____
Model (circle one): **TRUE-36-IFT** **TRUE-50-IFT** **Dealer/Distributor Phone #** _____
TRUE-42-IFT **Serial #:** _____

WARNING! Risk of Fire or Explosion! *Failure to install appliance according to these instructions could lead to a fire or explosion.*

Appliance Install Information	**YES**	**IF NO, WHY?**
Verified clearances to combustibles requirements are maintained. (Pg. 13-16)	☐	_____
Verified that the chase is insulated and sealed. (Pg. 17)	☐	_____
Verified mantel and wall clearance requirements are maintained. (Pg. 49-50)	☐	_____
Verified hearth extension requirements are maintained. (Pg. 18)	☐	_____
Verified appliance is leveled and secured. (Pg. 35)	☐	_____
Verified required factory-supplied non-combustible board installed. (Pg. 36)	☐	_____
Venting/Chimney Section 7 (Pg. 37-40)		
Verified venting configuration complies to vent diagrams.	☐	_____
Verified venting installed, locked and sealed/secured in place.	☐	_____
Verified venting meets clearance to combustible requirements.	☐	_____
Verified wall/ceiling firestops are installed (if applicable).	☐	_____
Verified attic insulation shield is installed (if applicable).	☐	_____
Verified Exterior wall/Roof flashing is installed and sealed.	☐	_____
Verified termination cap is installed and sealed.	☐	_____
Electrical Section 8 (Pg. 41-43)		
Verified unswitched power (110-120 VAC) provided to the appliance.	☐	_____
Verified wall switch wires are properly installed (if applicable).	☐	_____
Gas Section 9 (Pg. 44-45)		
Verified appliance is using proper fuel type.	☐	_____
If converted, verified proper fuel conversion kit was used.	☐	_____
Verified that gas components (fittings, pressure taps, etc) are leak free and fireplace is operating under correct pressures.	☐	_____
Finishing Section 10 (Pg. 46-51)		
Verified that finish material does not interfere with install/operation of decorative front.	☐	_____
Verified combustible materials are not installed in non-combustible areas.	☐	_____
Verified all clearances meet installation manual requirements.	☐	_____
Verified mantels/wall projections comply with installation manual requirements.	☐	_____
Appliance Setup Section 11 (Pg. 52-66)		
Verified all packaging and protective materials are removed (inside & outside of appliance).	☐	_____
Verified refractory (fiber or glass) is installed properly.	☐	_____
Verified Teco-Sil installed and properly fogged with black high temperature paint.	☐	_____
Verified Lava Rock, Mystic Embers, Glowing Embers, and logs installed correctly.	☐	_____
Verified fixed glass assembly installed and secured.	☐	_____
Verified that a required decorative door option is installed properly.	☐	_____
Verified remote control has been programmed and is fully functional.	☐	_____
Verified proper air shutter setting for installation type and vent configuration.	☐	_____
Manual bag and all of its contents are removed from inside/under the appliance and given to party responsible for use and operation.	☐	_____

Hearth & Home Technologies recommends the following:

- Photographing the installation and copying this checklist for your file.
- That this checklist remain visible at all times on the appliance until the installation is complete.

Comments: Further description of the issues, who is responsible (Installer/ Builder/ Other Trades, etc) and corrective action needed _____

Comments Communicated to party responsible _____ by _____ on _____
➔ = Contains updated information. (Builder / Gen. Contractor/) (Installer) (Date)

2461-982 12/16

1 Product Specific and Important Safety Information

A. Appliance Certification

MODELS: **TRUE-36G-IFT, TRUE-36TG-IFT, TRUE-36S-IFT, TRUE-42G-IFT, TRUE-42TG-IFT, TRUE-42S-IFT TRUE-50TG-IFT, TRUE-50S-IFT**
LABORATORY: **Underwriters Laboratories, Inc. (UL)**
TYPE: **Direct Vent Heater**
STANDARD: **CSA / ANSI Z21.88-2019 • CSA 2.33-2019**

This product is listed to ANSI standards for "Vented Gas Fireplace Heaters" and applicable sections of "Gas Burning Heating Appliances for Manufactured Homes and Recreational Vehicles", and "Gas Fired Appliances for Use at High Altitudes".

NOTICE: *This installation must conform with local codes. In the absence of local codes you must comply with the National Fuel Gas Code, ANSI Z223.1-latest edition in the U.S.A. and the CAN/CGA B149 Installation Codes in Canada.*

NOT INTENDED FOR USE AS A PRIMARY HEAT SOURCE. This appliance is tested and approved as either supplemental room heat or as a decorative appliance. It should not be factored as primary heat in residential heating calculations.

B. Glass Specifications

This appliance is equipped with 5 mm ceramic glass with an anti-reflective coating. Replace glass only with glass with identical specifications. Please contact your dealer for replacement glass.

C. BTU Specifications

Models *(U.S. or Canada)*		**Maximum Input BTU/h**	**Minimum Input BTU/h**	**Orifice Size (DMS)**
TRUE-36G-IFT TRUE-36TG-IFT TRUE-36S-IFT (NG)	*(0-2000 FT)*	45,500	28,000	#30
TRUE-36G-IFT TRUE-36TG-IFT TRUE-36S-IFT (Propane)	*(0-2000 FT)*	43,500	24,000	#47
TRUE-42G-IFT TRUE-42TG-IFT TRUE-42S-IFT (NG)	*(0-2000 FT)*	55,500	30,500	#26
TRUE-42G-IFT TRUE-42TG-IFT TRUE-42S-IFT (Propane)	*(0-2000 FT)*	47,500	23,500	#45
TRUE-50TG-IFT TRUE-50S-IFT (NG)	*(0-2000 FT)*	65,000	36,000	#24
TRUE-50TG-IFT TRUE-50S-IFT (Propane)	*(0-2000 FT)*	57,500	30,250	#43

D. High Altitude Installations

NOTICE: *If the heating value of the gas has been reduced, these rules do not apply. Check with your local gas utility or authorities having jurisdiction.*

When installing above 2000 feet elevation:

- In the USA: Reduce input rate 4% for each 1000 feet above 2000 feet.
- In CANADA: Input ratings are certified without a reduction of input rate for elevations up to 4500 feet (1370 m) above sea level. Please consult provincial and/or local authorities having jurisdiction for installations at elevations above 4500 feet (1370 m).

Check with your local gas utility to determine proper orifice size.

E. Non-Combustible Materials Specification

Material which will not ignite and burn. Such materials are those consisting entirely of steel, iron, brick, tile, concrete, slate, glass or plasters, or any combination thereof.

Materials that are reported as passing **ASTM E 136, Standard Test Method for Behavior of Materials in a Vertical Tube Furnace at 750 ºC** shall be considered non-combustible materials.

F. Combustible Materials Specification

Materials made of or surfaced with wood, compressed paper, plant fibers, plastics, or other material that can ignite and burn, whether flame proofed or not, or plastered or unplastered shall be considered combustible materials.

G. Electrical Codes

NOTICE: *This appliance must be electrically wired and grounded in accordance with local codes or, in the absence of local codes, with* **National Electric Code ANSI/NFPA 70-latest edition** *or the* **Canadian Electric Code CSA C22.1.**

- A 110-120 VAC circuit for this product must be protected with ground-fault circuit-interrupter protection, in compliance with the applicable electrical codes, when it is installed in locations such as in bathrooms or near sinks.

H. California

WARNING: This product and the fuels used to operate this product (liquid propane or natural gas), and the products of combustion of such fuels, can expose you to chemicals including benzene, which is known to the State of California to cause cancer and reproductive harm. For more information go to: www.P65Warnings.ca.gov.

Note: The following requirements reference various Massachusetts and national codes not contained in this document.

I. Requirements for the Commonwealth of Massachusetts

For all side wall horizontally vented gas fueled equipment installed in every dwelling, building or structure used in whole or in part for residential purposes, including those owned or operated by the Commonwealth and where the side wall exhaust vent termination is less than seven (7) feet above finished grade in the area of the venting, including but not limited to decks and porches, the following requirements shall be satisfied:

Installation of Carbon Monoxide Detectors

At the time of installation of the side wall horizontal vented gas fueled equipment, the installing plumber or gas fitter shall observe that a hard wired carbon monoxide detector with an alarm and battery back-up is installed on the floor level where the gas equipment is to be installed. In addition, the installing plumber or gas fitter shall observe that a battery operated or hard wired carbon monoxide detector with an alarm is installed on each additional level of the dwelling, building or structure served by the side wall horizontal vented gas fueled equipment. It shall be the responsibility of the property owner to secure the services of qualified licensed professionals for the installation of hard wired carbon monoxide detectors.

In the event that the side wall horizontally vented gas fueled equipment is installed in a crawl space or an attic, the hard wired carbon monoxide detector with alarm and battery back-up may be installed on the next adjacent floor level.
In the event that the requirements of this subdivision can not be met at the time of completion of installation, the owner shall have a period of thirty (30) days to comply with the above requirements; provided, however, that during said thirty (30) day period, a battery operated carbon monoxide detector with an alarm shall be installed.

Approved Carbon Monoxide Detectors

Each carbon monoxide detector as required in accordance with the above provisions shall comply with NFPA 720 and be ANSI/UL 2034 listed and IAS certified.

Signage

A metal or plastic identification plate shall be permanently mounted to the exterior of the building at a minimum height of eight (8) feet above grade directly in line with the exhaust vent terminal for the horizontally vented gas fueled heating appliance or equipment. The sign shall read, in print size no less than one-half (1/2) in. in size, **"GAS VENT DIRECTLY BELOW. KEEP CLEAR OF ALL OBSTRUCTIONS".**

Inspection

The state or local gas inspector of the side wall horizontally vented gas fueled equipment shall not approve the installation unless, upon inspection, the inspector observes carbon monoxide detectors and signage installed in accordance with the provisions of 248 CMR 5.08(2)(a)1 through 4.

Exemptions

The following equipment is exempt from 248 CMR 5.08(2)(a)1 through 4:

- The equipment listed in Chapter 10 entitled "Equipment Not Required To Be Vented" in the most current edition of NFPA 54 as adopted by the Board; and
- Product Approved side wall horizontally vented gas fueled equipment installed in a room or structure separate from the dwelling, building or structure used in whole or in part for residential purposes.

MANUFACTURER REQUIREMENTS

Gas Equipment Venting System Provided

When the manufacturer of Product Approved side wall horizontally vented gas equipment provides a venting system design or venting system components with the equipment, the instructions provided by the manufacturer for installation of the equipment and the venting system shall include:

- Detailed instructions for the installation of the venting system design or the venting system components; and
- A complete parts list for the venting system design or venting system.

Gas Equipment Venting System NOT Provided

When the manufacturer of a Product Approved side wall horizontally vented gas fueled equipment does not provide the parts for venting the flue gases, but identifies "special venting systems", the following requirements shall be satisfied by the manufacturer:

- The referenced "special venting system" instructions shall be included with the appliance or equipment installation instructions; and
- The "special venting systems" shall be Product Approved by the Board, and the instructions for that system shall include a parts list and detailed installation instructions.

A copy of all installation instructions for all Product Approved side wall horizontally vented gas fueled equipment, all venting instructions, all parts lists for venting instructions, and/or all venting design instructions shall remain with the appliance or equipment at the completion of the installation.

See Gas Connection section for additional Commonwealth of Massachusetts requirements.

2 Getting Started

A. Design and Installation Considerations

Heat & Glo direct vent gas appliances are designed to operate with all combustion air siphoned from outside of the building and all exhaust gases expelled to the outside. No additional outside air source is required.

Installation MUST comply with local, regional, state and national codes and regulations. Consult insurance carrier, local building inspector, fire officials or authorities having jurisdiction over restrictions, installation inspection and permits.

Before installing, determine the following:

- Where the appliance is to be installed.
- The vent system configuration to be used.
- Gas supply piping requirements.
- Electrical wiring requirements.
- Framing and finishing details.
- Whether optional accessories—devices such as a wall switch or remote control—are desired.

Installation and service of this appliance should be performed by qualified personnel. Hearth & Home Technologies recommends HHT Factory Trained or NFI certified professionals.

hearthED FACTORY TRAINING Fuel Your Fire

NFI NATIONAL FIREPLACE INSTITUTE A CERTIFICATION AGENCY

Improper installation, adjustment, alteration, service or maintenance can cause injury or property damage. For assistance or additional information, consult a qualified service technician, service agency or your dealer.

B. Good Faith Wall Surface

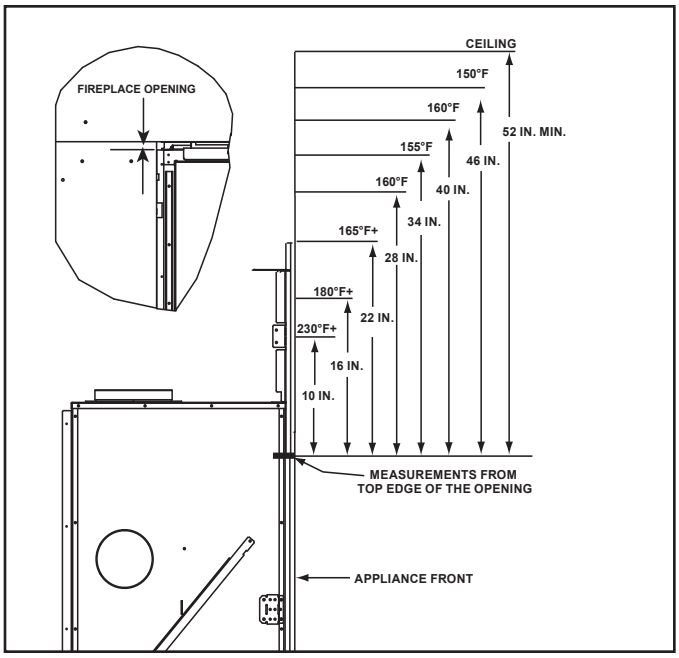

Figure 2.1 Good Faith Wall Surface Temperatures Above Appliance

NOTICE: *Temperatures listed above are taken with a temperature measuring probe as prescribed by the test standard used for appliance certification. Temperatures on walls or mantels taken with an infrared thermometer may yield increased temperatures of up to 30 degrees or more depending on the thermometer settings and material characteristics being measured.*

C. Tools and Supplies Needed

Before beginning the installation be sure that the following tools and building supplies are available.

Tape measure	Framing material
Pliers	Hammer
Phillips screwdriver	Manometer
Gloves	Framing square
Voltmeter	Electric drill and bits (1/4 in.)
Plumb line	Safety glasses
Level	Reciprocating saw

Flat blade screwdriver

Non-corrosive leak check solution

1/2 - 3/4 in. length, #6 or #8 Self-drilling screws

Caulking material (300 ºF minimum continuous exposure rating)

D. Inspect Appliance and Components

- Carefully remove the appliance and components from the packaging.
- The vent system components and decorative fronts may be shipped in separate packages.
- If packaged separately, the log set and appliance grate must be installed.
- Report to your dealer any parts damaged in shipment, particularly the condition of the glass.
- This product is factory-equipped with an IntelliFire Touch® remote control, which was paired to the appliance at the factory. This specific remote control needs to remain with the contents of the manual bag. Do not install batteries in the remote control until performing the final appliance setup and checklist.
- **Read all of the instructions before starting the installation. Follow these instructions carefully during the installation to ensure maximum safety and benefit.**

WARNING! Risk of Fire or Explosion! *Damaged parts could impair safe operation.* ***DO NOT i****nstall damaged, incomplete or substitute components. Keep appliance dry.*

Hearth & Home Technologies disclaims any responsibility for, and the warranty will be voided by, the following actions:

- Installation and use of any damaged appliance or vent system component.
- Modification of the appliance or vent system.
- Installation other than as instructed by Hearth & Home Technologies.
- Improper positioning of the gas logs or the glass door.
- Installation and/or use of any component part not approved by Hearth & Home Technologies.

Any such action may cause a fire hazard.

WARNING! Risk of Fire, Explosion or Electric Shock! ***DO NOT*** *use this appliance if any part has been under water. Call a qualified service technician to inspect the appliance and to replace any part of the control system and/or gas control which has been under water.*

3 Framing and Clearances

A. Appliance/Decorative Front Dimension Diagrams

Dimensions are actual appliance dimensions. Use for reference only. For framing dimensions and clearances refer to Section 5.

APPLIANCE DIMENSION DIAGRAM (TRUE-36-IFT)

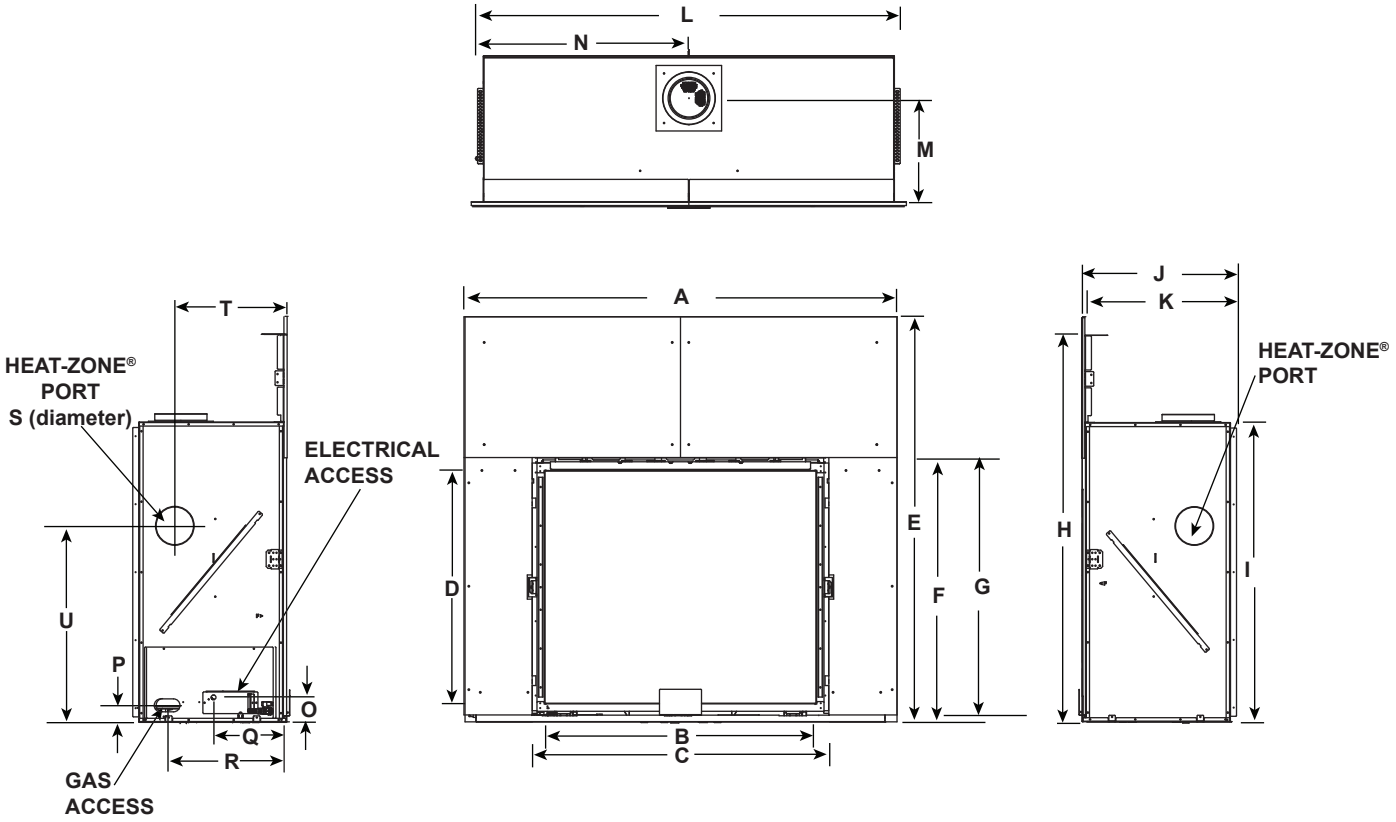

Appliance Dimensions Table TRUE-36-IFT

Location	Inches	Millimeters
A	61	1549
B	35-7/8	911
C	39-7/8	1013
D	31-1/16	789
E	57-5/8	1464
F	35-13/16	910
G	34-13/16	884
H	54-15/16	1395
I	41-3/8	1051
J	24	610
K	23-1/2	597

Location	Inches	Millimeters
L	59-1/4	1505
M	16	406
N	29-5/8	752
O	3-7/8	98
P	2-3/4	70
Q	10-7/8	276
R	16-1/8	410
S	6	152
T	16-7/8	429
U	25-5/8	651

Figure 3.1 Appliance Dimensions (TRUE-36-IFT)

APPLIANCE DIMENSION DIAGRAM (TRUE-42-IFT/TRUE-50-IFT)

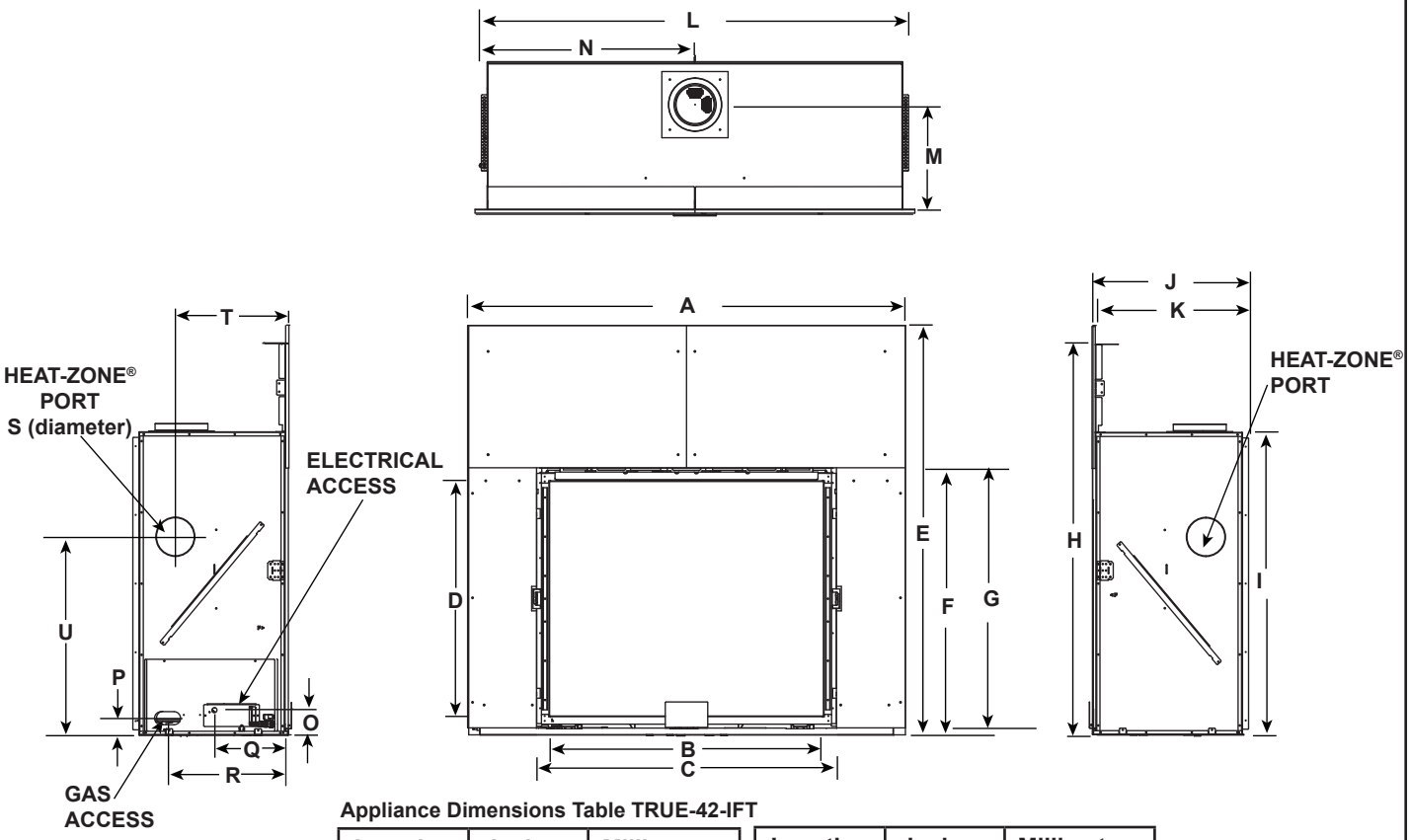

Appliance Dimensions Table TRUE-42-IFT

Location	Inches	Millimeters
A	67	1702
B	41-7/8	1064
C	45-7/8	1165
D	36-1/16	916
E	62-5/8	1591
F	40-13/16	1037
G	39-13/16	1011
H	59-15/16	1522
I	46-3/8	1178
J	24	610
K	23-1/2	597

Location	Inches	Millimeters
L	65-5/16	1659
M	16	406
N	32-11/16	830
O	3-7/8	98
P	2-3/4	70
Q	10-7/8	276
R	16-1/8	410
S	6	152
T	16-7/8	429
U	30-5/8	778

Appliance Dimensions Table TRUE-50-IFT

Location	Inches	Millimeters
A	75	1905
B	49-7/8	1267
C	53-7/8	1368
D	40-1/16	1018
E	66-5/8	1692
F	44-13/16	1138
G	43-13/16	1113
H	63-15/16	1624
I	50-3/8	1280
J	24	610
K	23-1/2	597

Location	Inches	Millimeters
L	73-5/16	1862
M	16	406
N	36-11/16	932
O	3-7/8	98
P	2-3/4	70
Q	10-7/8	276
R	16-1/8	410
S	6	152
T	16-7/8	429
U	34-5/8	879

Figure 3.2 Appliance Dimensions (TRUE-42-IFT & TRUE-50-IFT)

DECORATIVE FRONT DIMENSION DIAGRAM (TRUE-36-IFT)

See Section 10 for facing and finishing detail.

FS-36-IFT

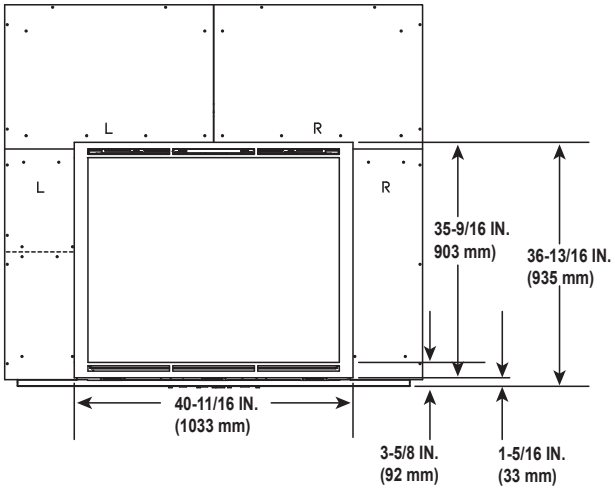

FS-36A-IFT

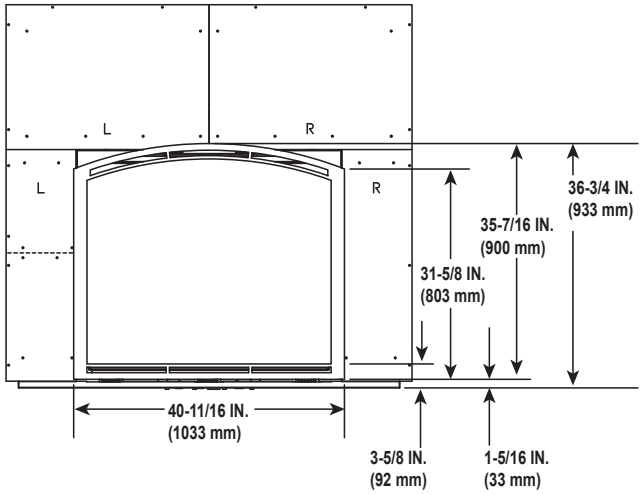

FORGE-36-IFT

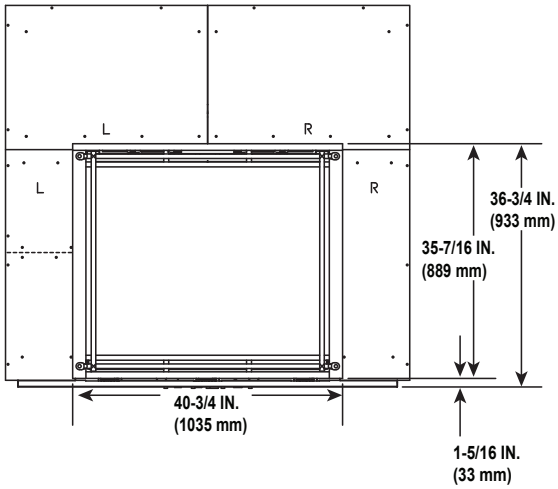

FORGE-36A-IFT

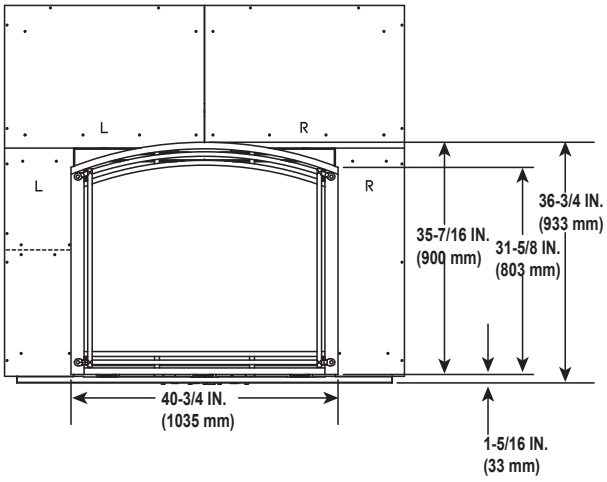

Figure 3.3 Decorative Front Dimensions (TRUE-36-IFT)

DECORATIVE FRONT DIMENSION DIAGRAM (TRUE-42-IFT)

See Section 10 for facing and finishing detail.

FS-42-IFT

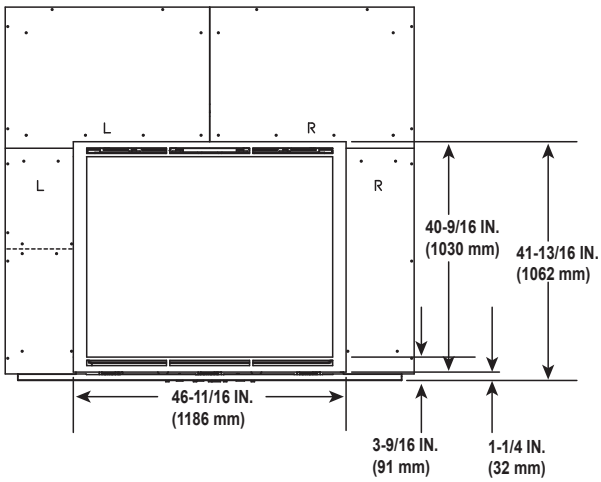

FS-42A-IFT

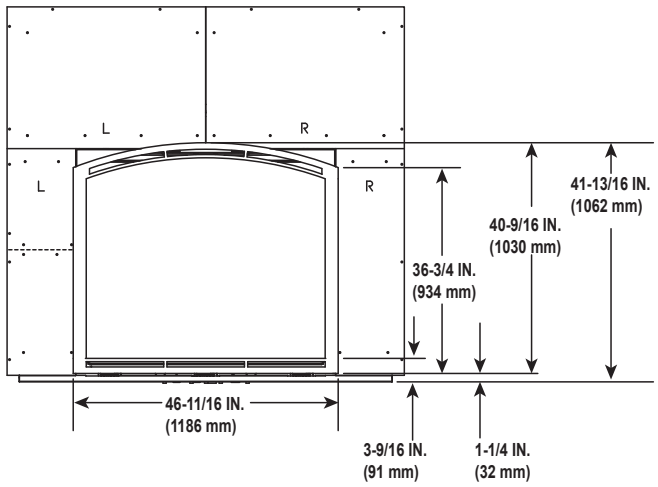

FORGE-42-IFT

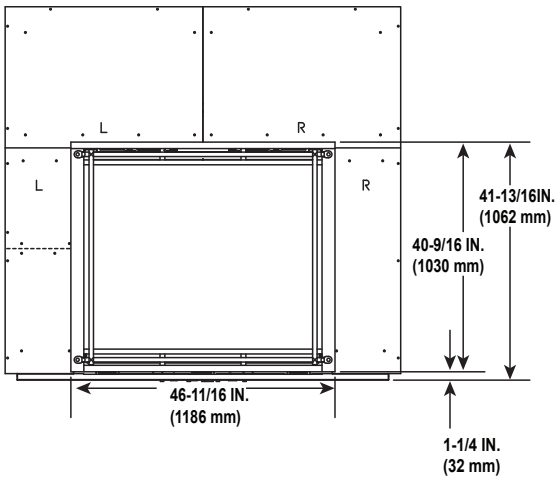

FORGE-42A-IFT

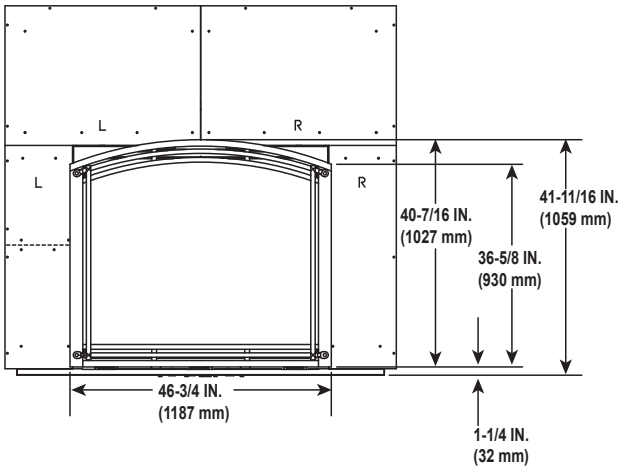

Figure 3.4 Decorative Front Dimensions (TRUE-42-IFT)

DECORATIVE FRONT DIMENSION DIAGRAM (TRUE-50-IFT)

See Section 10 for facing and finishing detail.

FS-50IFT

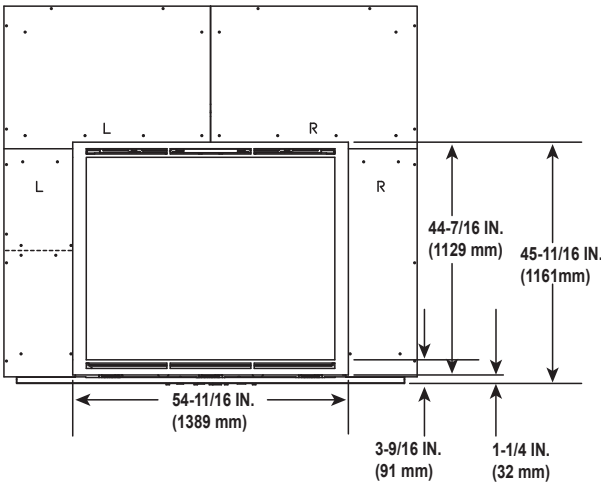

FS-50AIFT

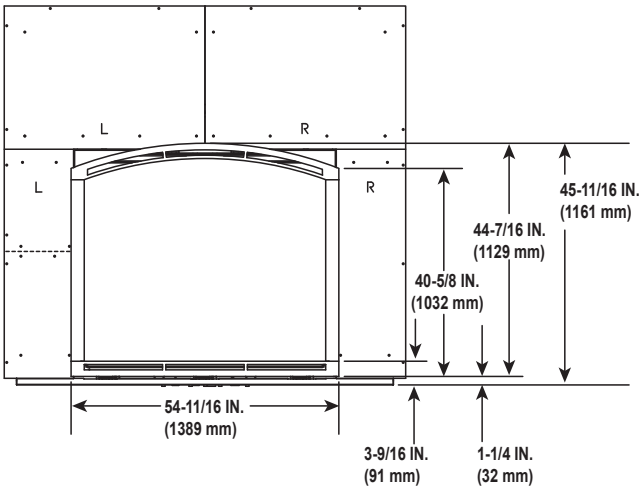

FORGE-50IFT

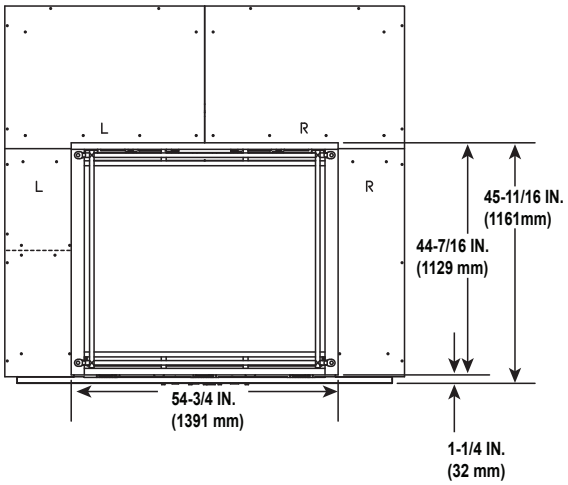

FORGE-50AIFT

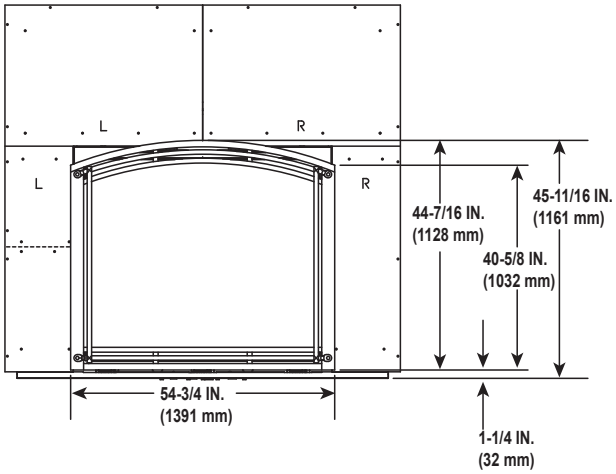

Figure 3.5 Decorative Front Dimensions (TRUE-50-IFT)

B. Clearances to Combustibles

When selecting a location for the appliance it is important to consider the required clearances to walls (see Figure 3.6).

WARNING! Risk of Fire or Burns! *Provide adequate clearance around air openings and for service access. Due to high temperatures, the appliance should be located out of traffic and away from furniture and draperies.*

NOTICE: *Illustrations reflect typical installations and are FOR DESIGN PURPOSES ONLY. Illustrations/diagrams are not drawn to scale. Actual installation may vary due to individual design preference.*

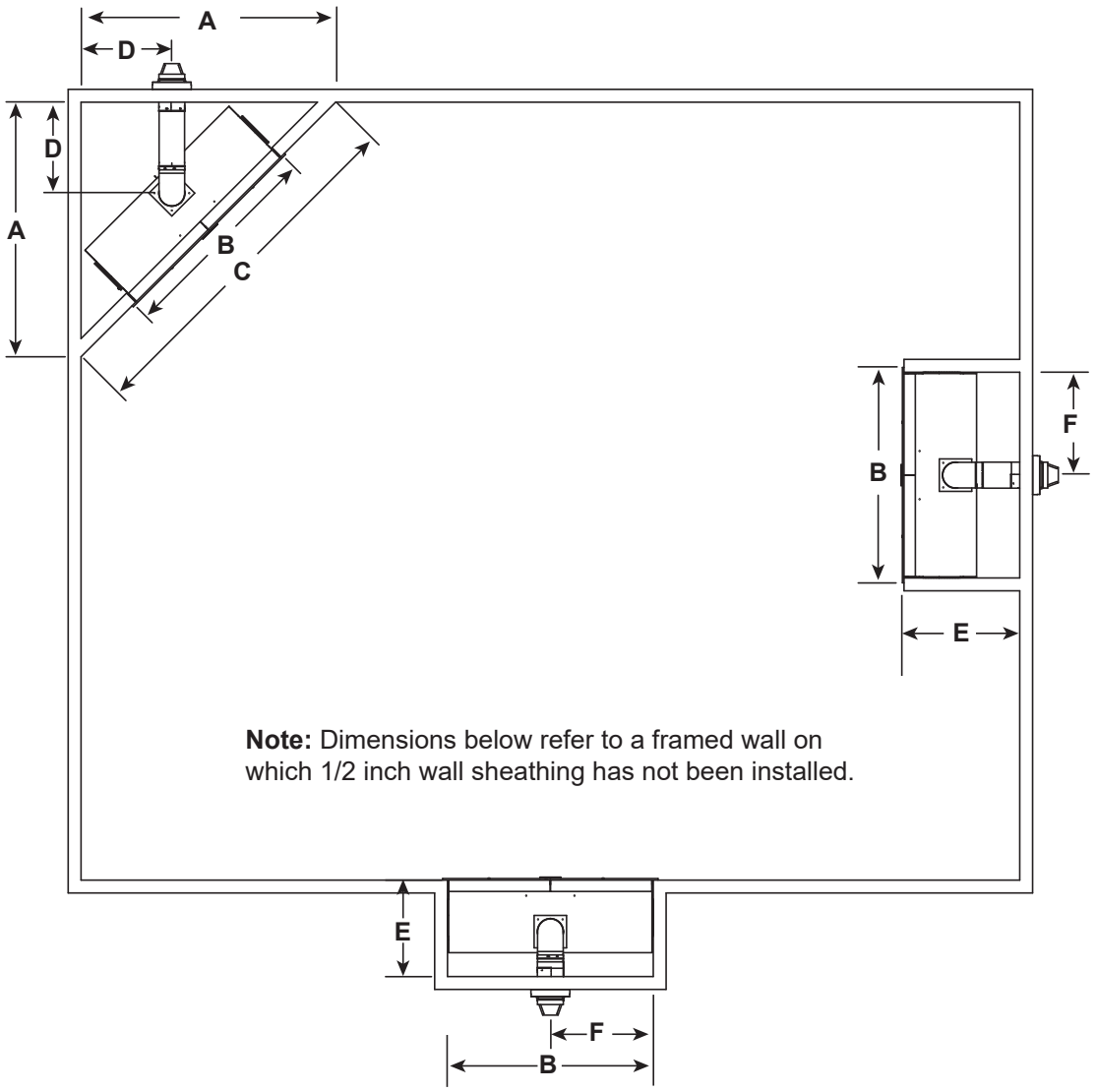

		A	B	C	D	E	F
TRUE-36-IFT	Inches	74-1/4	59-1/2	105	26-1/2	24	29-3/4
	Millimeters	1886	1511	2667	673	610	756
TRUE-42-IFT	Inches	78-9/16	65-9/16	111-1/16	28-5/8	24	32-13/16
	Millimeters	1995	1665	2821	727	610	833
TRUE-50-IFT	Inches	84-1/4	73-9/16	119-1/8	31-1/2	24	36-13/16
	Millimeters	2140	1868	3026	800	610	935

Figure 3.6 Appliance Locations

Non-Combustible Zone

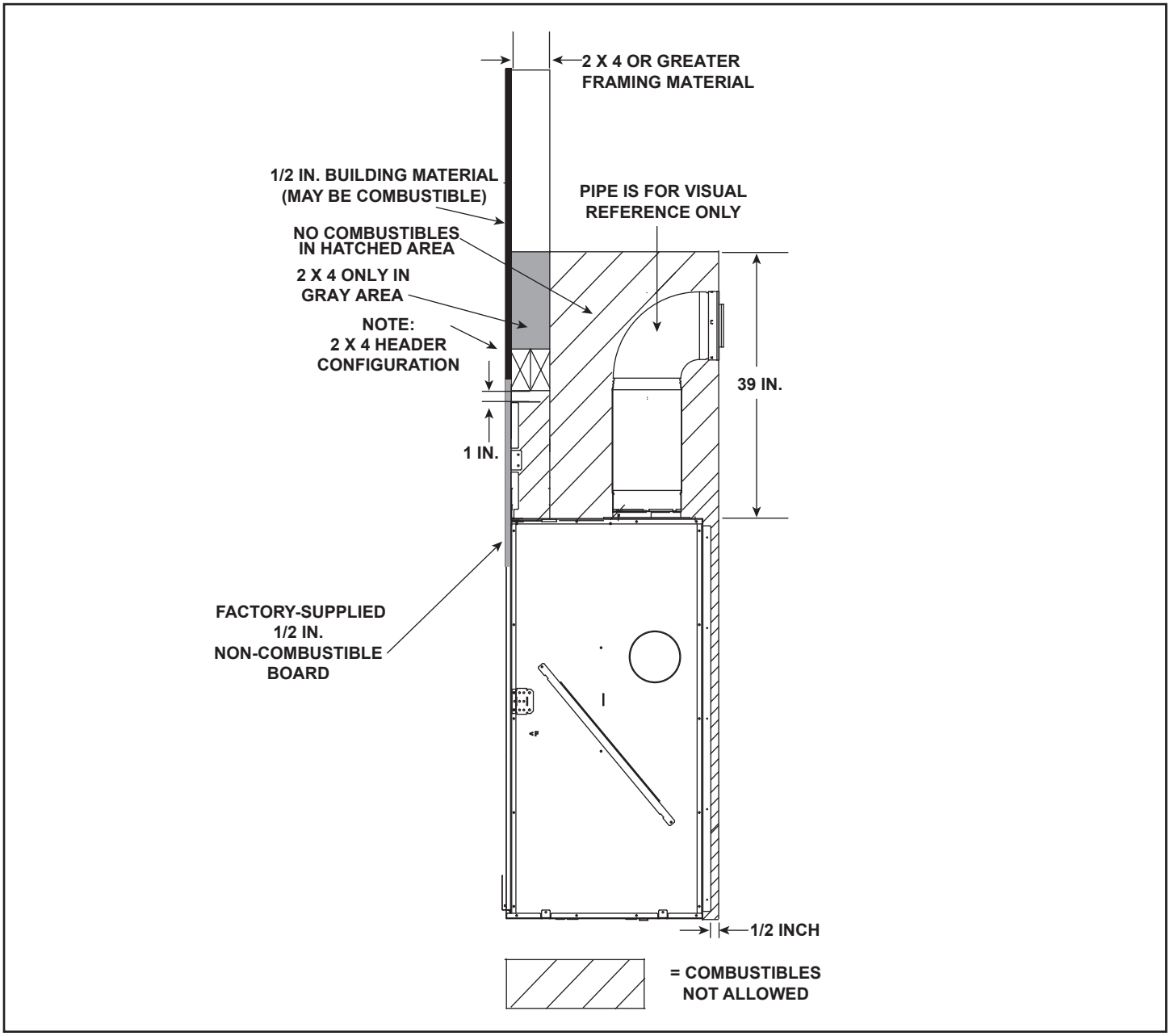

Figure 3.7 Non-Combustible Zone

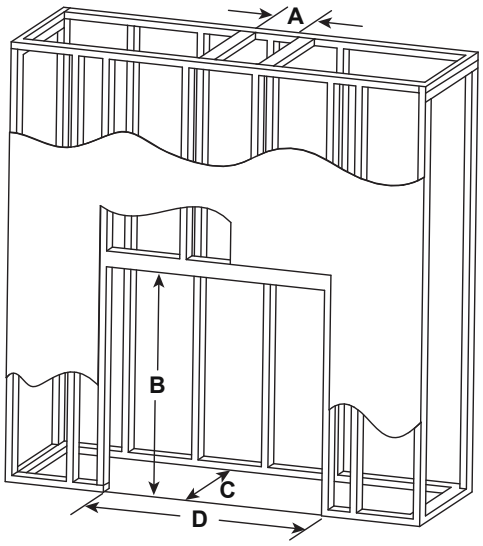

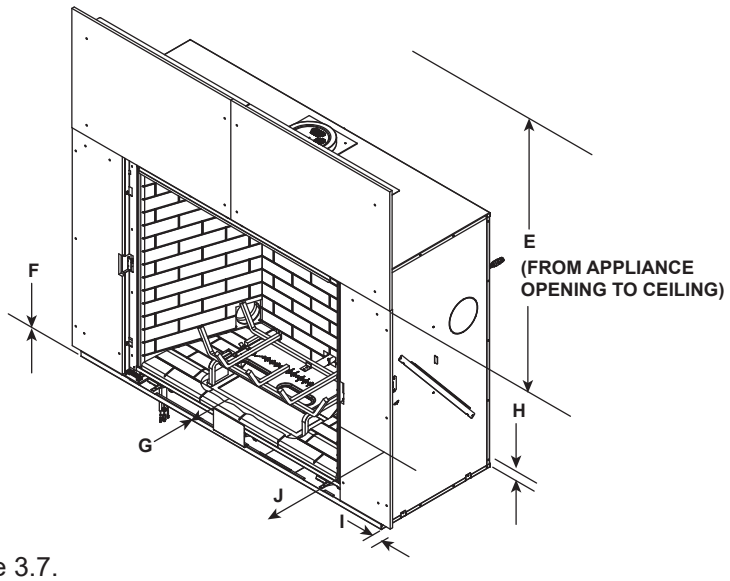

NOTE: 2 X 4 Header positioned vertically. See also Figure 3.7.

	* MINIMUM FRAMING DIMENSIONS USING 2 X 4 CONSTRUCTION										
		A	**B**	**C**	**D**	**E**	**F**	**G**	**H**	**I**	**J**
		Rough Opening (Vent Pipe)	Rough Opening (Height)	Rough Opening (Depth)	Rough Opening (Width)	Clearance to Ceiling	Combustible Floor	Combustible Flooring	Behind Appliance	Sides of Appli-ance	Front of Appliance
TRUE-36-IFT	Inches	10	56	24	59-1/2	52	0	See Section 3.D.	1	1	36
	Millimeters	254	1422	610	1511	1321	0		25	25	914
TRUE-42-**IFT**	Inches	10	61	24	65-9/16	52	0		1	1	36
	Millimeters	254	1549	610	1665	1321	0		25	25	914
TRUE-50-**IFT**	Inches	10	65	24	73-9/16	52	0		1	1	36
	Millimeters	254	1651	610	1868	1321	0		25	25	914

* Adjust framing dimensions for interior sheathing (such as sheetrock)

Figure 3.8 Clearances to Combustibles (2 X 4 Construction)

2 X 6 OR GREATER NOT ALLOWED IN SHADED AREA

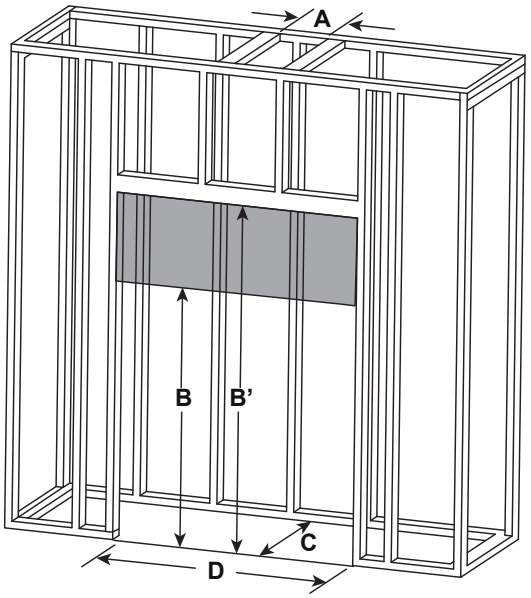

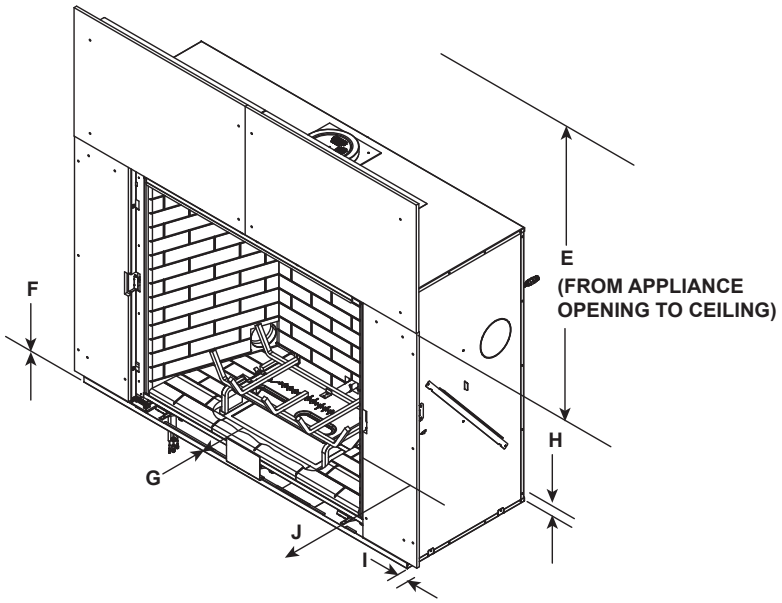

NOTE: 2 X 4 Header positioned vertically. See also Figure 3.7.

	*** MINIMUM FRAMING DIMENSIONS USING 2 X 6 CONSTRUCTION**						
		A	**B**	**B'**	**C**	**D**	**E**
		Rough Opening (Vent Pipe)	Rough Opening (Height)	**Rough Opening Height	Rough Opening (Depth)	Rough Opening (Width)	Clearance to Ceiling
TRUE-36-**IFT**	Inches	10	56	80-3/8	24	59-1/2	52
	Millimeters	254	1422	2042	610	1511	1321
TRUE-42-**IFT**	Inches	10	61	85-3/8	24	65-9/16	52
	Millimeters	254	1549	2169	610	1665	1321
TRUE-50-**IFT**	Inches	10	65	89-3/8	24	73-9/16	52
	Millimeters	254	1651	2270	610	1868	1321

	*** MINIMUM FRAMING DIMENSIONS USING 2 X 6 CONSTRUCTION**					
		F	**G**	**H**	**I**	**J**
		Combustible Floor	Combustible Flooring	Behind Appliance	Sides of Appliance	Front of Appliance
TRUE-36-**IFT**	Inches	0	See Section 3.D.	1	1	36
	Millimeters	0		25	25	914
TRUE-42-**IFT**	Inches	0		1	1	36
	Millimeters	0		25	25	914
TRUE-50-**IFT**	Inches	0		1	1	36
	Millimeters	0		25	25	914

* Adjust framing dimensions for interior sheathing (such as sheetrock).
** 2 x 4 material must be framed down from 2 x 6 rough opening height B' to rough opening height B.

Figure 3.9 Clearances to Combustibles (2 x 6 Construction)

C. Constructing the Appliance Chase

A chase is a vertical box-like structure built to enclose the gas appliance and/or its vent system. In cooler climates the vent should be enclosed inside the chase.

NOTICE: *Treatment of ceiling firestops and wall shield firestops and construction of the chase may vary with the type of building. These instructions are not substitutes for the requirements of local building codes. Therefore, you MUST check local building codes to determine the requirements to these steps.*

NOTICE: Where required by code, install only sprinkler heads with a sprinkler activation temperature classified as Extra High.

- *Sprinklers inside of chase: Keep sprinkler head away from vent and chimney.*
- *Heat Management applications: Maintain 36 inches of clearance to openings from which heat is discharged such as heat zone registers, etc.*

Chases should be constructed and insulated in the same manner as the thermal envelope of the home based on the code requirements for that climate zone to prevent air leakage and draft problems. The chase is an extension of the building thermal envelope.

To further prevent drafts and air leakage, the wall shield and ceiling firestops should be caulked with caulk with a minimum of 300 ºF continuous exposure rating to seal gaps. Gas line holes and other openings should be caulked with caulk with a minimum of 300 ºF continuous exposure rating or stuffed with unfaced insulation. If the appliance is being installed on a cement surface, a layer of plywood may be placed underneath to prevent conducting cold up into the room.

NOTICE: *Install appliance on hard metal or wood surfaces extending full width and depth.* ***DO NOT*** *install directly on carpeting, vinyl, tile or any combustible material other than wood.*

WARNING! Risk of Fire! *Maintain specified air space clearances to appliance and vent pipe:*

- Insulation and other materials must be secured to prevent accidental contact.
- The chase must be properly blocked to prevent blown insulation or other combustibles from entering and making contact with fireplace or chimney.
- Failure to maintain airspace may cause overheating and a fire.

D. Hearth Extension

WARNING! Risk of Fire! *Non-combustible hearth extension may be required when appliance is installed on combustible surface.*

- Hearth extension must be non-combustible and serves to protect combustible floors in front of appliance. See Figure 3.10 and Figure 3.11.
- The base of the fireplace may sit on a combustible surface. See Figure 3.11. The area in front of the appliance must be protected by a non-combustible hearth extension, unless the appliance is raised a minimum of three inches above the combustible floor or hearth. See Figure 3.11 and Figure 3.12.
- If a hearth greater than one inch in thickness is desired, the appliance must be raised by the equivalent height to ensure that the hearth extension does not interfere with the installation of the glass assembly required for fireplace operation. See Figure 3.11.

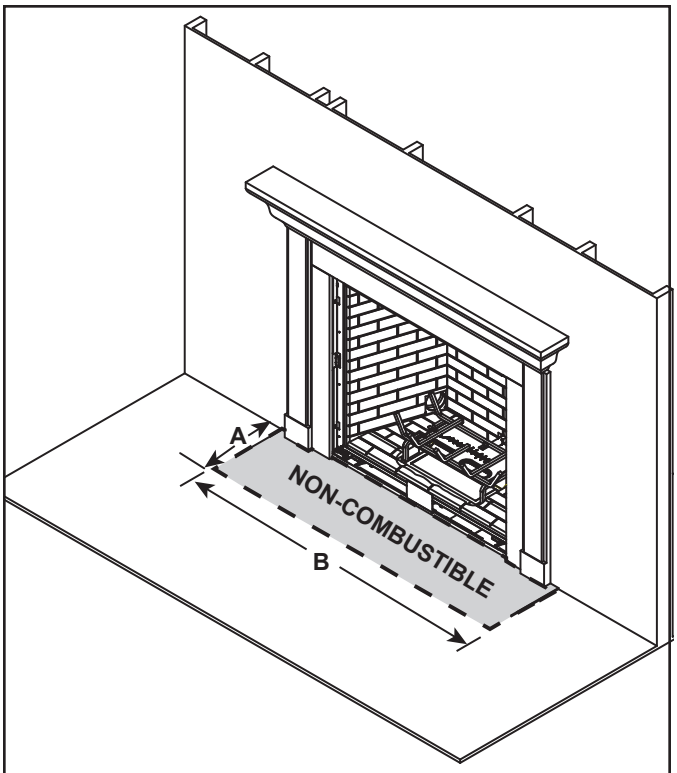

MODEL	A		B	
	in.	mm	in.	mm
TRUE-36-IFT	12	305	57-1/4	1454
TRUE-42-IFT	12	305	63-5/16	1608
TRUE-50-IFT	12	305	71-5/16	1811

Figure 3.10 Non-Combustible Hearth Extension Dimensions

NOTICE: DO NOT *install a hearth that is greater than one inch thick. Hearth will interfere with installation of glass assembly. Total hearth height must not exceed one inch from bottom of appliance when appliance is installed directly on floor (including mortar, backer material, etc.).*

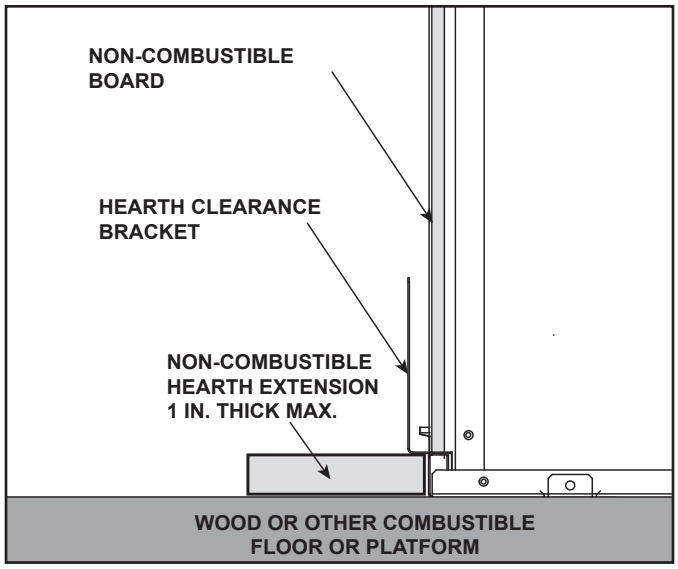

Figure 3.11 Appliance Installed on Combustible Surface Non-Combustible Hearth Extension REQUIRED.

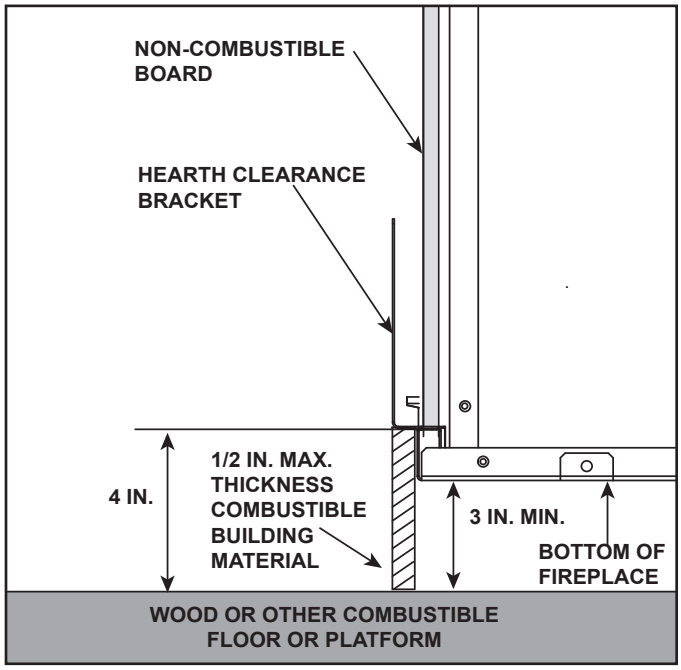

Figure 3.12 Appliance Raised a Minimum of 3 Inches Above Combustible Surface. Non-Combustible Hearth Extension NOT REQUIRED.

4 Termination Location and Vent Information

A. Vent Termination Minimum Clearances

⚠ WARNING

Fire Risk.

Maintain vent clearance to combustibles as specified.

- **DO NOT** pack air space with insulation or other materials.

Failure to keep insulation or other materials away from vent pipe may cause overheating and fire.

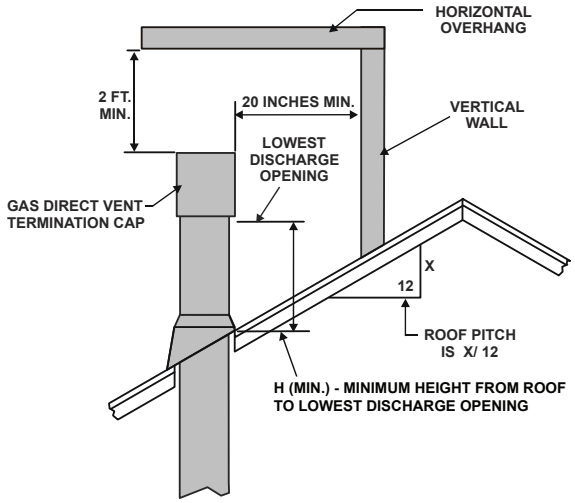

Roof Pitch	H (Min.) Ft.
Flat to 6/12	1.0*
Over 6/12 to 7/12	1.25*
Over 7/12 to 8/12	1.5*
Over 8/12 to 9/12	2.0*
Over 9/12 to 10/12	2.5*
Over 10/12 to 11/12	3.25
Over 11/12 to 12/12	4.0
Over 12/12 to 14/12	5.0
Over 14/12 to 16/12	6.0
Over 16/12 to 18/12	7.0
Over 18/12 to 20/12	7.5
Over 20/12 to 21/12	8.0

* H minimum may vary depending on regional snowfall. Refer to local codes.

Figure 4.1 Minimum Height From Roof To Lowest Discharge Opening

A	B
6 in. (minimum) up to 20 in. *152 mm/508 mm*	18 in. minimum *457 mm*
20 in. and over	0 in. minimum

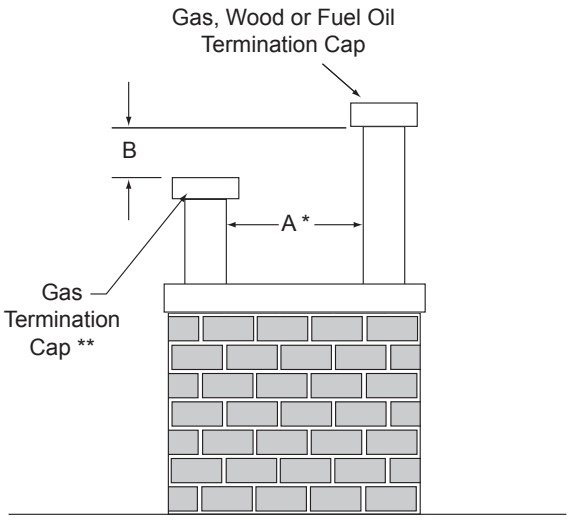

* If using decorative cap cover(s), this distance may need to be increased. Refer to the installation instructions supplied with the decorative cap cover.

** In a staggered installation with both gas and wood or fuel oil terminations, the wood or fuel oil termination cap must be higher than the gas termination cap.

Figure 4.2 Staggered Termination Caps

NOTICE: TRUE-50 Models Only

Horizontal vent terminations are NOT approved for installation with vinyl siding or vinyl soffits. Permanent damage to vinyl siding or vinyl soffits may occur.

NOTICE: TRUE-36 and TRUE-42 Only:

Horizontal vent terminations ARE approved for installation with vinyl siding and/or vinyl soffits provided the VPK-DV (vinyl protector kit) is installed. Permanent damage to vinyl siding or vinyl soffits may occur.

B. Chimney Diagram

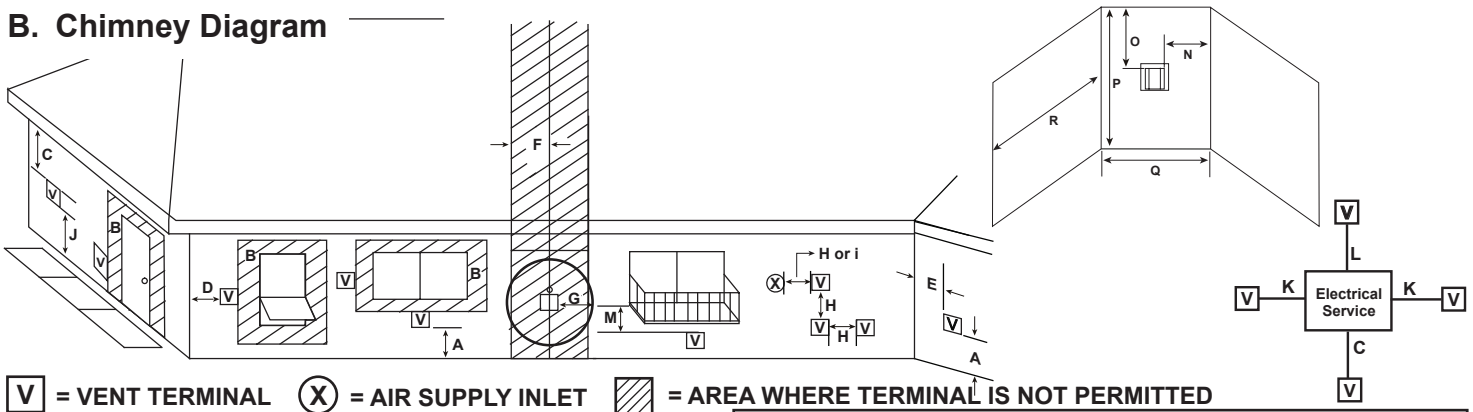

V = VENT TERMINAL **(X) = AIR SUPPLY INLET** **= AREA WHERE TERMINAL IS NOT PERMITTED**

A = 12 inches.....clearances above grade, veranda, porch, deck or balcony

B = 12 inches.....clearance to window or door that may be opened, or to permanently closed window

C = 18 inches.....clearance below an unventilated/ventilated soffit with non-vinyl siding

= 18 inches.....clearance below an unventilated/ventilated soffit with vinyl siding. Requires a vinyl protector kit (VPK-DV).TRUE-50 is not approved for use with vinyl siding or vinyl soffits.

= 42 inches.....clearance below a vinyl soffit with non-vinyl siding. TRUE-50 is not approved for use with vinyl siding or vinyl soffits.

= 42 inches.....clearance below a vinyl soffit with vinyl siding. Requires a vinyl protector kit (VPK-DV). TRUE-50 is not approved for use with vinyl siding or vinyl soffits.

D = 6 inches.....clearance to outside corner

E = 6 inches.....clearance to inside corner

F = 3 ft. (Canada).....not to be installed above a gas meter/regulator assembly within 3 feet horizontally from the center-line of the regulator

G = 3 ft.....clearance to gas service regulator vent outlet

H = 12 inches.....clearance to non-mechanical (unpowered) air supply inlet, combustion air inlet or direct-vent termination

i = 3 ft. (U.S.A.)
6 ft. (Canada).....clearance to a mechanical (powered) air supply inlet

All mechanical air intakes within 10 feet of a termination cap must be a minimum of 3 feet below termination.

J = 7 ft. ..... On **public** property: clearance above paved sidewalk or a paved driveway.

A vent shall not terminate directly above a sidewalk or paved driveway which is located between two single family dwellings and serves both dwellings.

K = 6 inches.....clearance from sides of electrical service

L = 12 inches.....clearance above electrical service

Location of the vent termination must not interfere with access to the electrical service.

M = 24 inches ..... clearance under veranda, porch, deck, balcony or overhang
42 inches ..... vinyl or composite overhang

Permitted when veranda, porch, deck or balcony is fully open on a minimum of 2 sides beneath the floor.

Figure 4.3 Minimum Clearances for Termination

Covered Alcove Applications

(Spaces open only on one side and with an overhang)

TRUE-50 is not approved for use with vinyl siding or vinyl soffits.

N = 6 inches .....non-vinyl sidewalls
12 inches .....vinyl sidewalls

O = 18 inches .....clearance below an unventilated/ventilated soffit with non-vinyl siding

= 18 inches.....clearance below an unventilated/ventilated soffit with vinyl siding. Requires a vinyl protector kit (VPK-DV).

= 42 inches.....clearance below a vinyl soffit with non-vinyl siding

= 42 inches.....clearance below a vinyl soffit with vinyl siding. Requires a vinyl protector kit (VPK-DV).

P = 8 ft.

	Q_{MIN}	R_{MAX}
1 cap	3 feet	2 x Q_{ACTUAL}
2 caps	6 feet	1 x Q_{ACTUAL}
3 caps	9 feet	2/3 x Q_{ACTUAL}
4 caps	12 feet	1/2 x Q_{ACTUAL}
Q_{MIN} = # termination caps x 3	R_{MAX} = (2 / # termination caps) x Q_{ACTUAL}	

Measure vertical clearances from this surface.

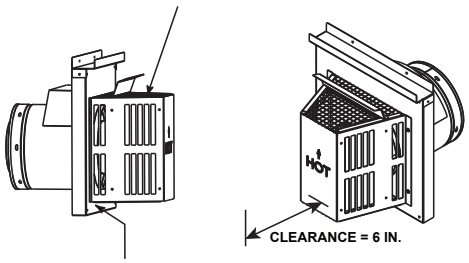

Measure horizontal clearances from this surface.

CAUTION! Risk of Burns! *Termination caps are HOT, consider proximity to doors, traffic areas or where people may pass or gather (sidewalk, deck, patio, etc.). Listed cap shields available. Contact your dealer.*

- Local codes or regulations may require different clearances.
- Vent system termination is **NOT** permitted in screened porches.
- Vent system termination is permitted in porch areas with two or more sides open.
- Hearth & Home Technologies assumes no responsibility for the improper performance of the appliance when the venting system does not meet these requirements.
- Vinyl protection kits are required for use with vinyl siding.

C. Approved Pipe

This appliance is approved for use with Hearth & Home Technologies DVP venting systems. Refer to Section 12.A for vent component information and dimensions. Only use listed decorative termination caps/shrouds with Hearth & Home Technologies approved venting systems.

DO NOT mix pipe, fittings or joining methods from different manufacturers.

The pipe is tested to be run inside an enclosed wall. There is no requirement for inspection openings at each joint within the wall.

WARNING! Risk of Fire or Asphyxiation. *This appliance requires a separate vent.* ***DO NOT*** *vent to a pipe serving a separate solid fuel burning appliance.*

D. Use of Elbows

Diagonal runs have both vertical and horizontal vent aspects when calculating the effects. Use the rise for the vertical aspect and the run for the horizontal aspect. See Figure 4.4.

Two 45º elbows may be used in place of one 90º elbow. On 45º runs, one foot of diagonal is equal to 8-1/2 in. (216 mm) horizontal run and 8-1/2 in. (216 mm) vertical run. A length of straight pipe is allowed between two 45º elbows. See Figure 4.4.

Figure 4.5 shows the vertical and horizontal offsets for DVP elbows.

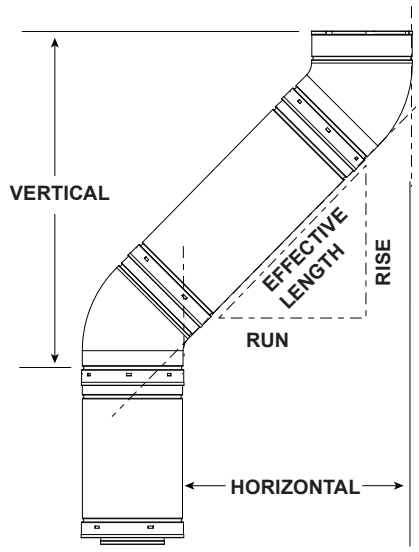

DVP Pipe	Effective Length		Rise/Run	
	Inches	Millimeters	Inches	Millimeters
DVP4	4	102	2-3/4	70
DVP6	6	152	4-1/4	108
DVP12	12	305	8-1/2	216
DVP24	24	610	17	432
DVP36	36	914	25-1/2	648
DVP48	48	1219	34	864
DVP6A	3 to 6	76 to 152	2-1/8-4-1/4	54-108
DVP12A	3 to 12	76 to 305	2-1/8-8-1/2	54-216

Figure 4.4

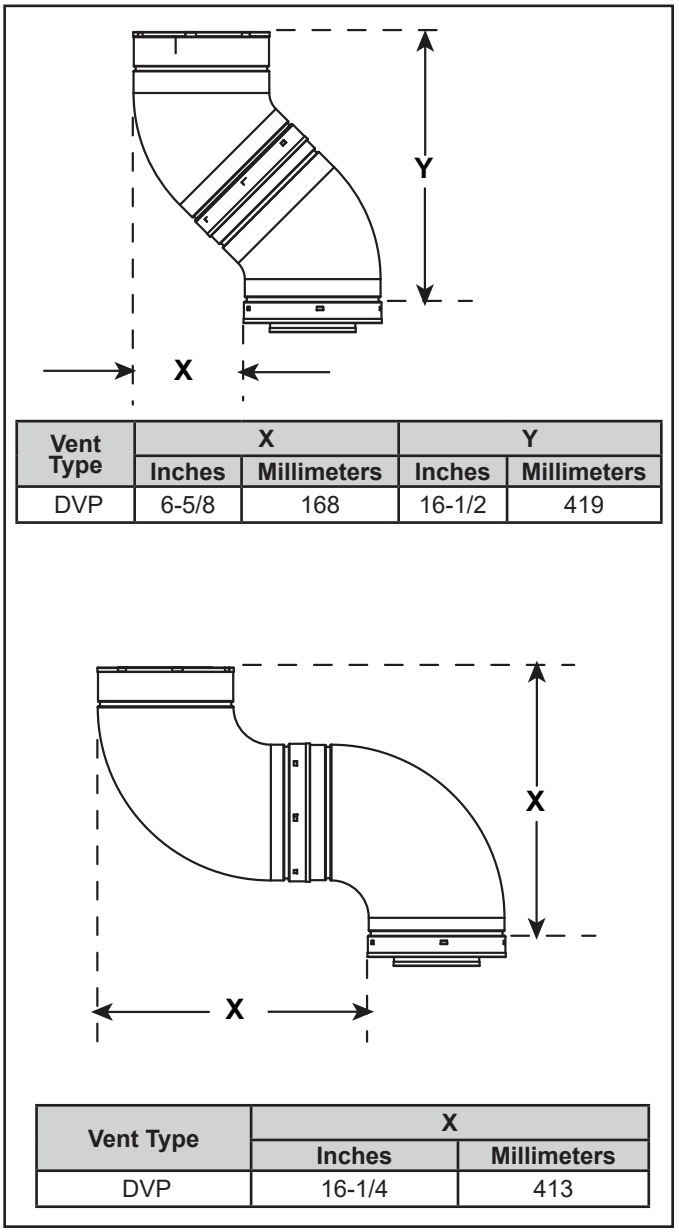

Vent Type	X		Y	
	Inches	Millimeters	Inches	Millimeters
DVP	6-5/8	168	16-1/2	419

Vent Type	X	
	Inches	Millimeters
DVP	16-1/4	413

Figure 4.5 Vertical and Horizontal Offset for DVP Elbows

E. Measuring Standards

Vertical and horizontal measurements listed in the vent diagrams were made using the following standards:

- Pipe measurements are shown using the effective length of pipe. See Section 12.A (Figure 12.1) for information on effective length of pipe components.
- Horizontal terminations are measured to the outside mounting surface (flange of termination cap) (see Figure 4.6).
- Vertical terminations are measured to top of last section of pipe. See Figure 4.7.
- Horizontal pipe installed level with no rise.

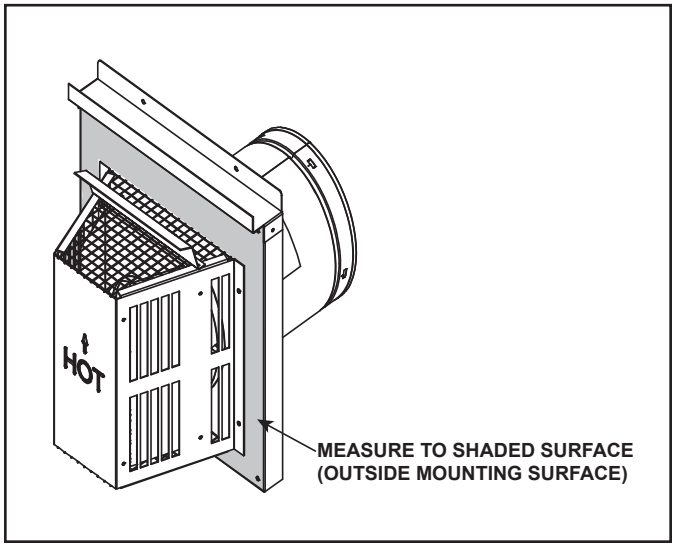

Figure 4.6 Measure to Outside Mounting Surface

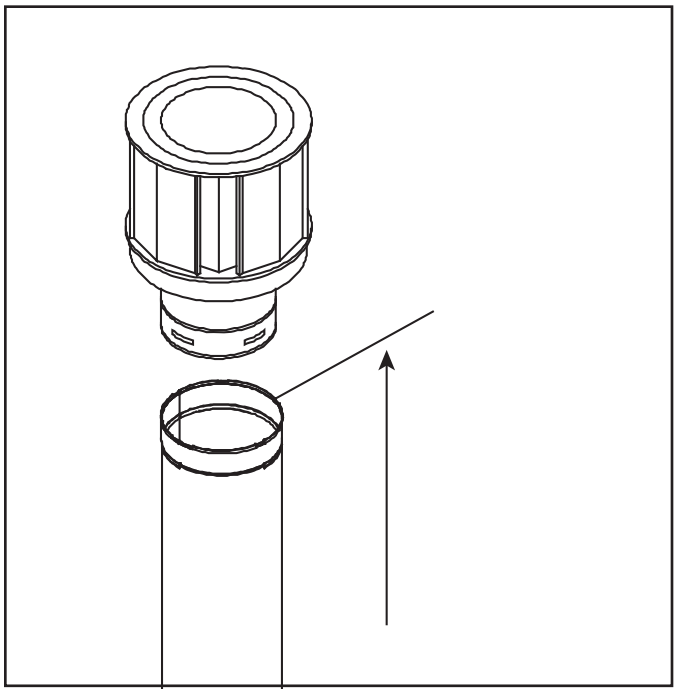

Figure 4.7. Measure to Top of Last Section of Pipe

F. Vent Diagrams

WARNING! Risk of Fire. *This appliance requires a minimum of 24 inches of vertical venting before attaching any elbow to the appliance.* ***DO NOT*** *attach elbow directly to the appliance.*

General Rules:

- This appliance is approved for use with Hearth & Home Technologies DVP venting systems ONLY.
- When penetrating a combustible wall, a wall shield firestop must be installed.
- When penetrating a combustible ceiling, a ceiling firestop must be installed.
- This appliance requires a minimum of 24 inches of vertical pipe attached directly to the appliance starting collar before attaching a 90 degree or 45 degree elbow.
- Horizontal termination cap should have a 1/4 inch downward slant to allow any moisture in cap to be released.

Top Vent - Horizontal Termination
One Elbow

WARNING! Risk of Fire!

- *TRUE-36(NG/P), TRUE-42(NG), and TRUE-50(NG/P) models require a minimum of 24 inches of vertical venting before attaching any elbow to the appliance.*
- *TRUE-42(P) model requires a minimum of 36 inches of vertical venting before attaching any elbow to the appliance.*

DO NOT attach elbow directly to the appliance.

TRUE-36 (NG/P), TRUE-42 (NG), TRUE-50 (NG/P)			
V_1 Minimum		**H_1 Maximum**	
2 ft	610 mm	7 in*	178 mm
2.5 ft	762 mm	17 in	432 mm
3 ft	914 mm	2 ft	610 mm
4 ft	1.2 m	4 ft	1.2 m
5 ft	1.5 m	9 ft	2.7 m
6 ft	1.8 m	12 ft	3.7 m
7 ft	2.1 m	14 ft	4.3 m
10 ft	3.0 m	20 ft	6.1 m
20 ft	6.1 m	40 ft	12.2 m
After V_1= 6 ft then H_1 = 2 x V ft Maximum V_1 + H_1 = 60 ft Maximum *when used with approved termination caps			

TRUE-42 (P)			
V_1 Minimum		**H_1 Maximum**	
3 ft	914 mm	10 in.	254 mm
4 ft	1.2 m	4 ft	1.2 m
5 ft	1.5 m	9 ft	2.7 m
6 ft	1.8 m	12 ft	3.7 m
7 ft	2.1 m	14 ft	4.3 m
10 ft	3.0 m	20 ft	6.1 m
20 ft	6.1 m	40 ft	12.2 m
After V_1= 6 ft then H_1 = 2 x V ft Maximum V_1 + H_1 = 60 ft Maximum *when used with approved termination caps			

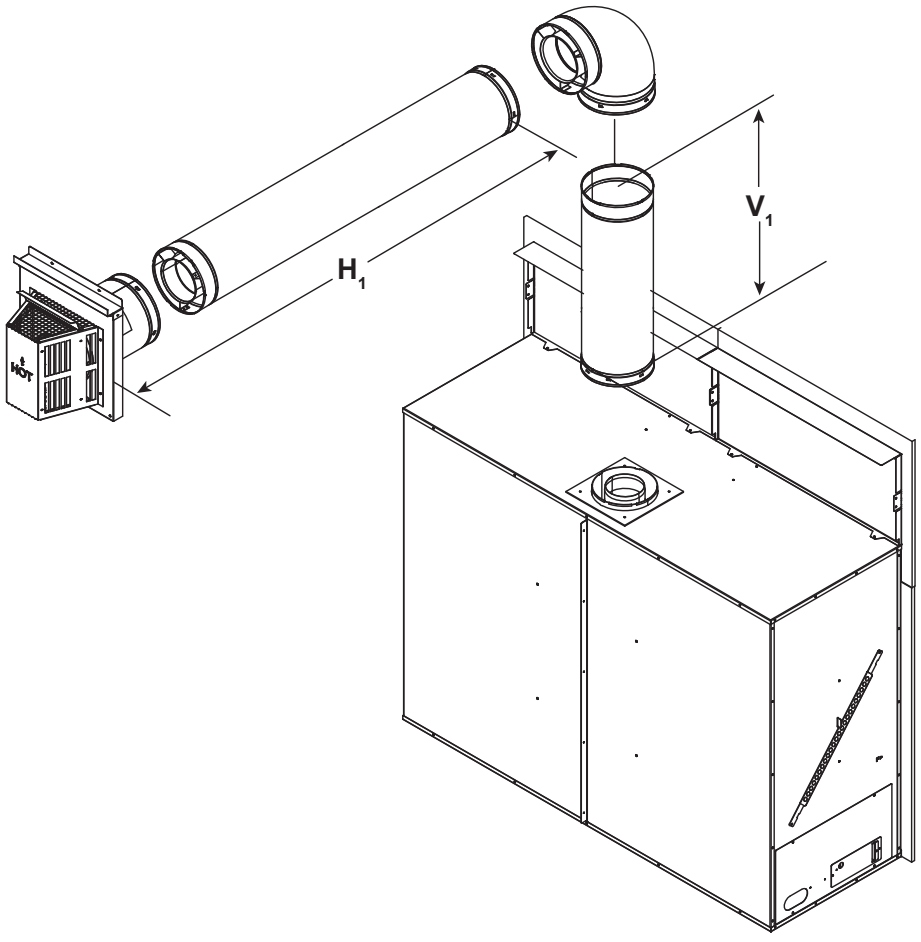

Figure 4.8

Two Elbows

WARNING! Risk of Fire!

- *TRUE-36(NG/P),TRUE-42(NG/P) and TRUE-50(NG/P) models require a minimum of 36 inches of vertical venting before attaching any elbow to the appliance for the venting configuration in Figure 4.7.*

DO NOT attach elbow directly to the appliance.

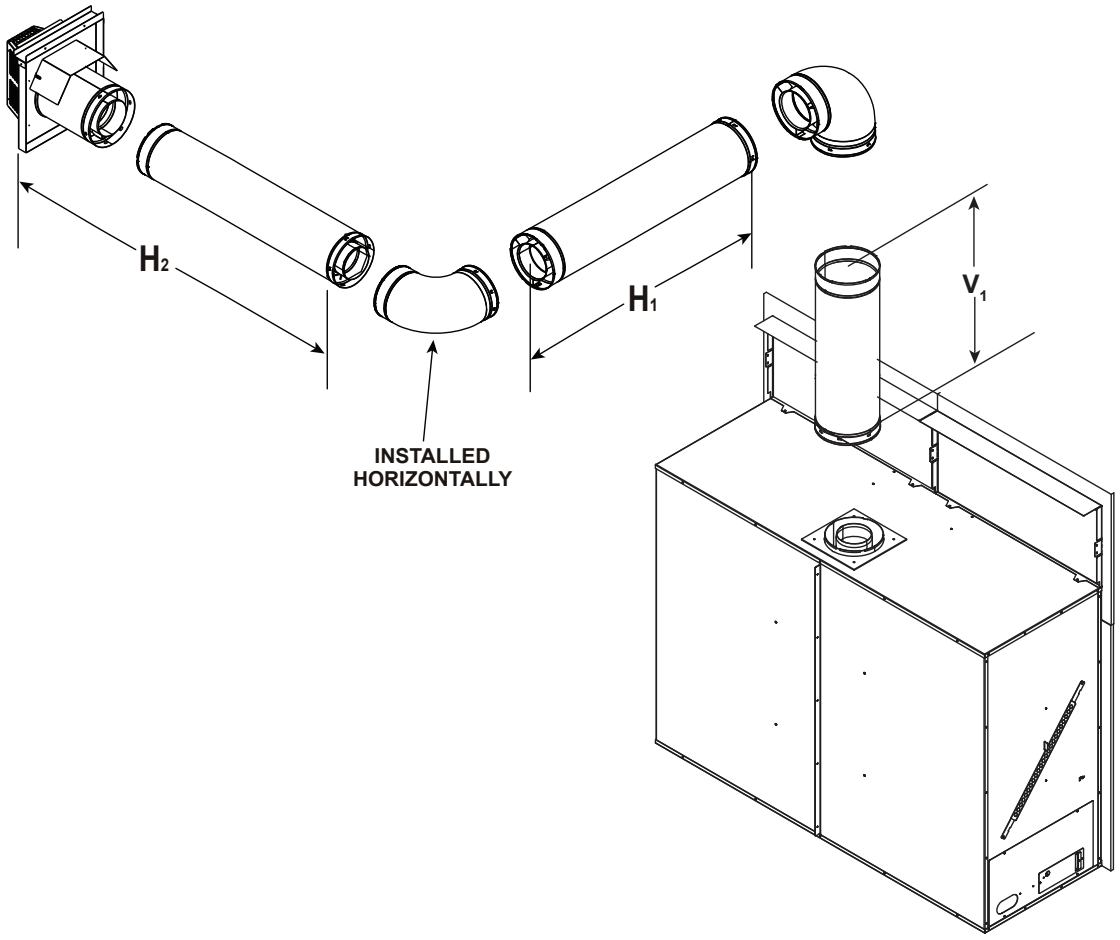

TRUE-36 (NG/P), TRUE-42 (NG/P), TRUE-50 (NG/P)			
V_1 Minimum		$H_1 + H_2$ Maximum	
3 ft	914 mm	18 in	457 mm
4 ft	1.2 m	3 ft	914 mm
5 ft	1.5 m	7 ft	2.1 m
6 ft	1.8 m	8 ft	2.4 m
7 ft	2.1 m	10 ft	3.0 m
8 ft	2.4 m	12 ft	3.7m
9 ft	2.7 m	14 ft	4.3 m
10 ft	3.0 m	16 ft	4.9 m
$V_1 + H_1 + H_2$= 60 ft Maximum $H_1 + H_2$= 20 ft Maximum			

Figure 4.9

Top Vent - Horizontal Termination - *(continued)*

Three Elbows

WARNING! Risk of Fire!

- *TRUE-36(NG/P), TRUE-42(NG/P) and TRUE-50 (NG/P) models require a minimum of 24 inches of vertical venting before attaching any elbow to the appliance.*

DO NOT attach elbow directly to the appliance.

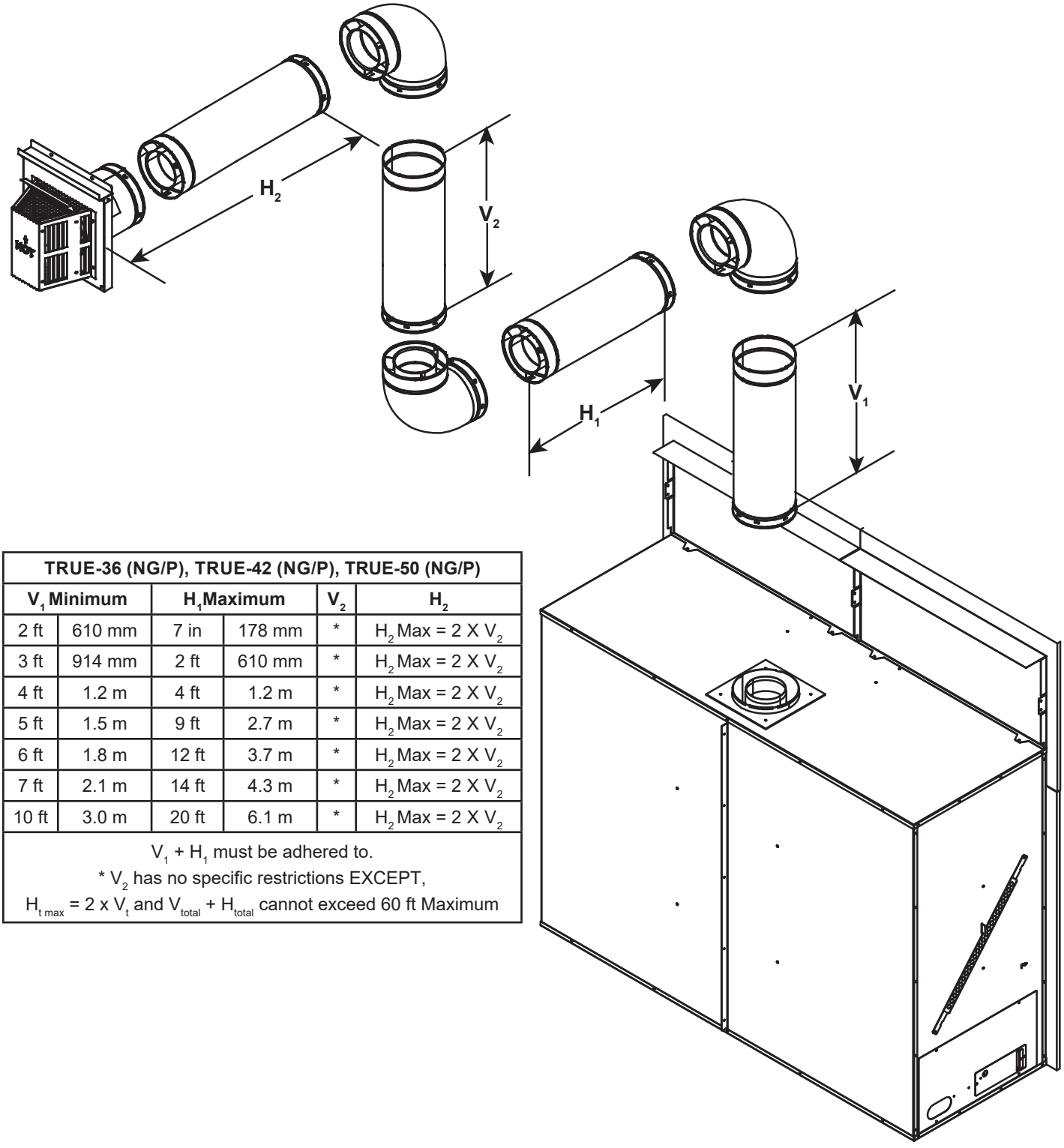

TRUE-36 (NG/P), TRUE-42 (NG/P), TRUE-50 (NG/P)					
V_1 Minimum		H_1 Maximum		V_2	H_2
2 ft	610 mm	7 in	178 mm	*	H_2 Max = 2 X V_2
3 ft	914 mm	2 ft	610 mm	*	H_2 Max = 2 X V_2
4 ft	1.2 m	4 ft	1.2 m	*	H_2 Max = 2 X V_2
5 ft	1.5 m	9 ft	2.7 m	*	H_2 Max = 2 X V_2
6 ft	1.8 m	12 ft	3.7 m	*	H_2 Max = 2 X V_2
7 ft	2.1 m	14 ft	4.3 m	*	H_2 Max = 2 X V_2
10 ft	3.0 m	20 ft	6.1 m	*	H_2 Max = 2 X V_2
$V_1 + H_1$ must be adhered to. * V_2 has no specific restrictions EXCEPT, $H_{t\,max} = 2 \times V_t$ and $V_{total} + H_{total}$ cannot exceed 60 ft Maximum					

Figure 4.10

Top Vent - Vertical Termination

No Elbow

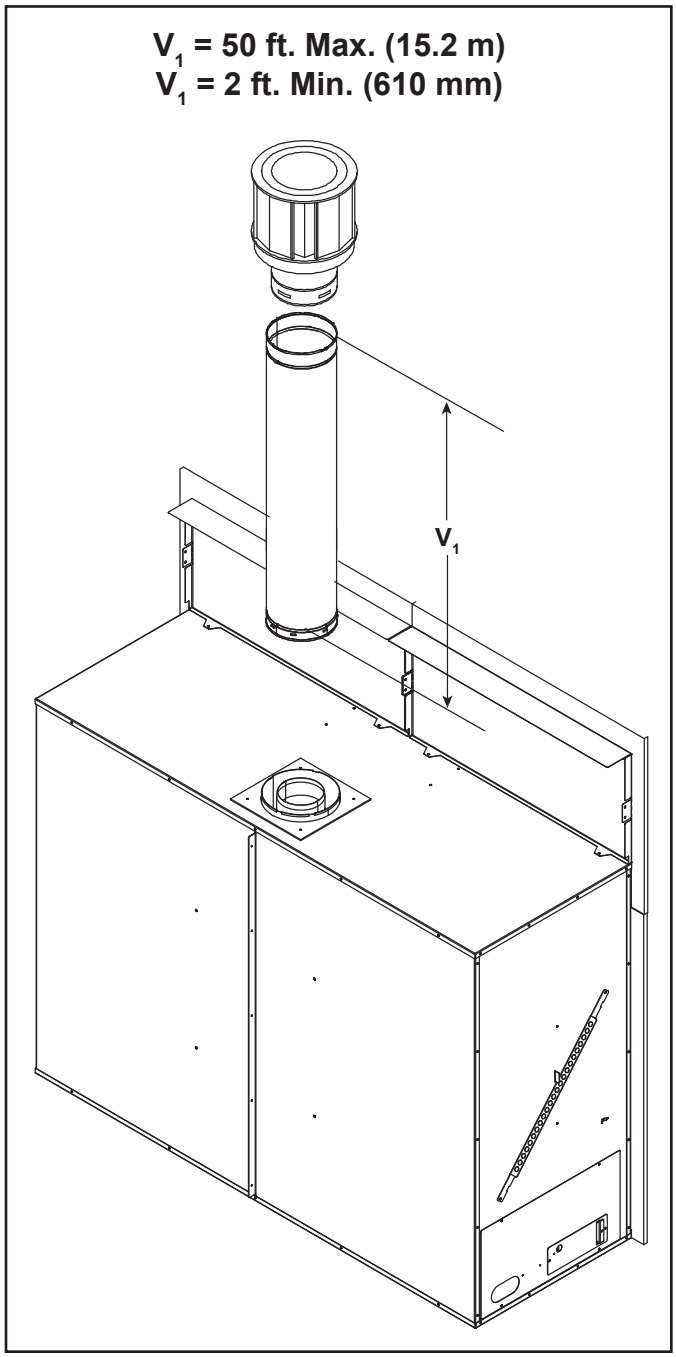

Figure 4.11

Exhaust Restrictor Instructions

Exhaust restrictors are recommended for these vertically terminated products which have excessive draft. Exhaust restrictors will compensate for high draft, and restore visual flame height. If the vent configuration has a total vertical of 11-50 feet, an exhaust restrictor may be needed. The exhaust restrictor can be located in the appliance manual bag.

1. Remove the top piece of refractory, if already installed.

2. Break the exhaust restrictor into two pieces. Do this by bending the part back and forth until it breaks. See Figure 4.13.
3. Orientate and align the two pieces of the exhaust restrictor as shown in Figure 4.13.

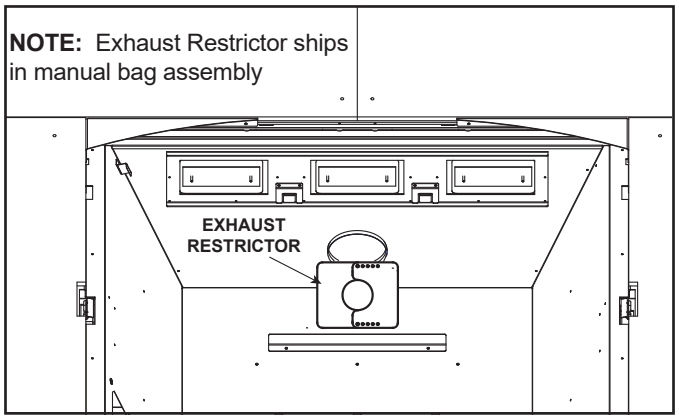

Figure 4.12 Exhaust Restrictor Installation

4. Match the amount of vertical you have in the system with the chart to find the appropriate position to set the exhaust restrictor. See Table 4.1.
5. Center the two exhaust restrictor pieces on the vent at the setting selected in step 3 and secure in place by using two self-tapping screws. See Figure 4.12.
6. Reinstall the top refractory.

Vertical Pipe	TRUE36	TRUE42	TRUE50
Up to 10 ft.	No Restrictor	No Restrictor	No Restrictor
11-30 ft.	1-1	1-1	1-1
31-50 ft.	2-2	2-2	2-2

Table 4.1.

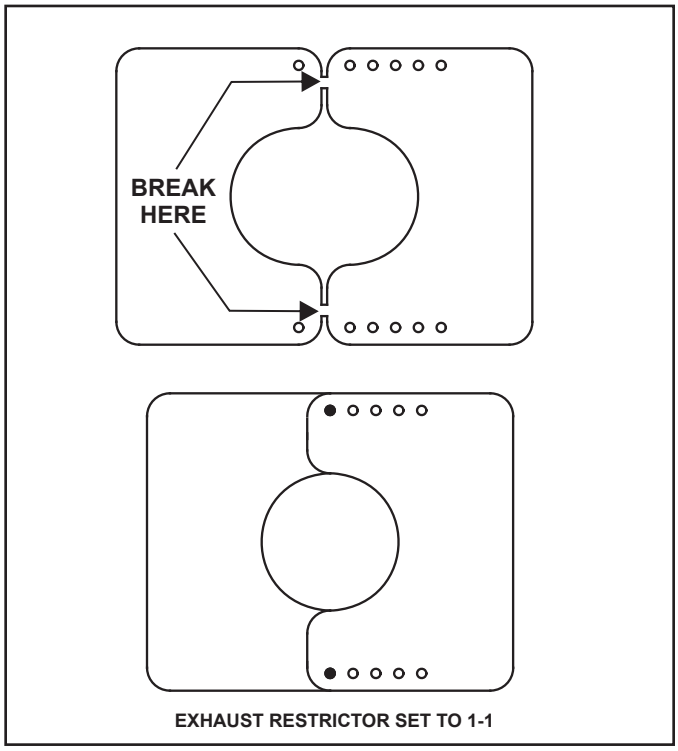

Figure 4.13 Exhaust Restrictor Installation

Top Vent - Vertical Termination - *(continued)*

2 ELBOWS

WARNING! Risk of Fire!

- *TRUE-36(NG/P), TRUE-42(NG/P) and TRUE-50 (NG/P) models require a minimum of 24 inches of vertical venting before attaching any elbow to the appliance.*

DO NOT attach elbow directly to the appliance.

TRUE-36 (NG/P), TRUE-42 (NG/P), TRUE-50 (NG/P)				
V_1 Minumum		H_1 Maximum		V_2
2 ft	610 mm	1 ft	305 mm	*
3 ft	914 mm	3 ft	914 mm	*
4 ft	1.2 m	4 ft	1.2 m	*
5 ft	1.5 m	9 ft	2.7 m	*
6 ft	1.8 m	12 ft	3.7 m	*
*No specific restrictions on this value EXCEPT $V_1 + V_2 + H_1$ = 50 ft (15.2 m) Max. After V_1 = 6 ft, then H_1 Max.= V_1 x 2				

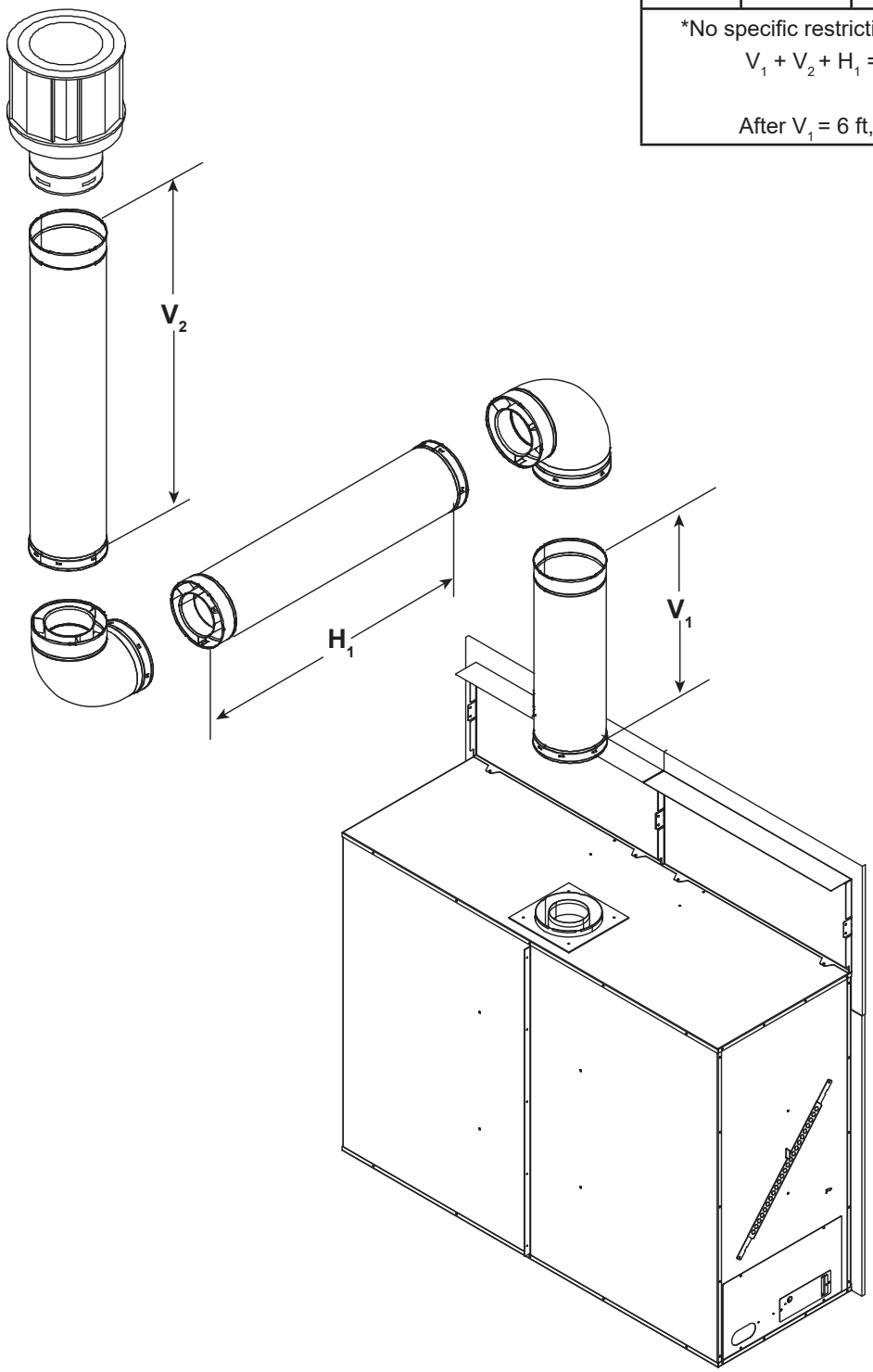

Figure 4.14

Top Vent - Vertical Termination - *(continued)*

Three Elbows

WARNING! Risk of Fire!

- *TRUE-36(NG/P), TRUE-42(NG/P) and TRUE-50 (NG/P) models require a minimum of 24 inches of vertical venting before attaching any elbow to the appliance.*

DO NOT attach elbow directly to the appliance.

TRUE-36 (NG/P), TRUE-42 (NG/P), TRUE-50 (NG/P)						
V_1 Minimum		H_1	H_2	V_2	H_{TOTAL} Max.	
2 ft	610 mm	*	*	**	7 in	178 mm
3 ft	914 mm	*	*	**	2 ft	610 mm
4 ft	1.2 m	*	*	**	4 ft	1.2 m
5 ft	1.5 m	*	*	**	8 ft	2.4 m
6 ft	1.8 m	*	*	**	12 ft	3.7 m
7 ft	2.1 m	*	*	**	14 ft	4.3 m
10 ft	3.0 m	*	*	**	20 ft	6.1 m
*H_1 and H_2 has no specific restrictions EXCEPT, after V_1 = 6 ft, then H_{TOTAL} Max = 2 x V_1 **V_{TOTAL} + H_{TOTAL} = 50 ft (15.2 m) Max.						

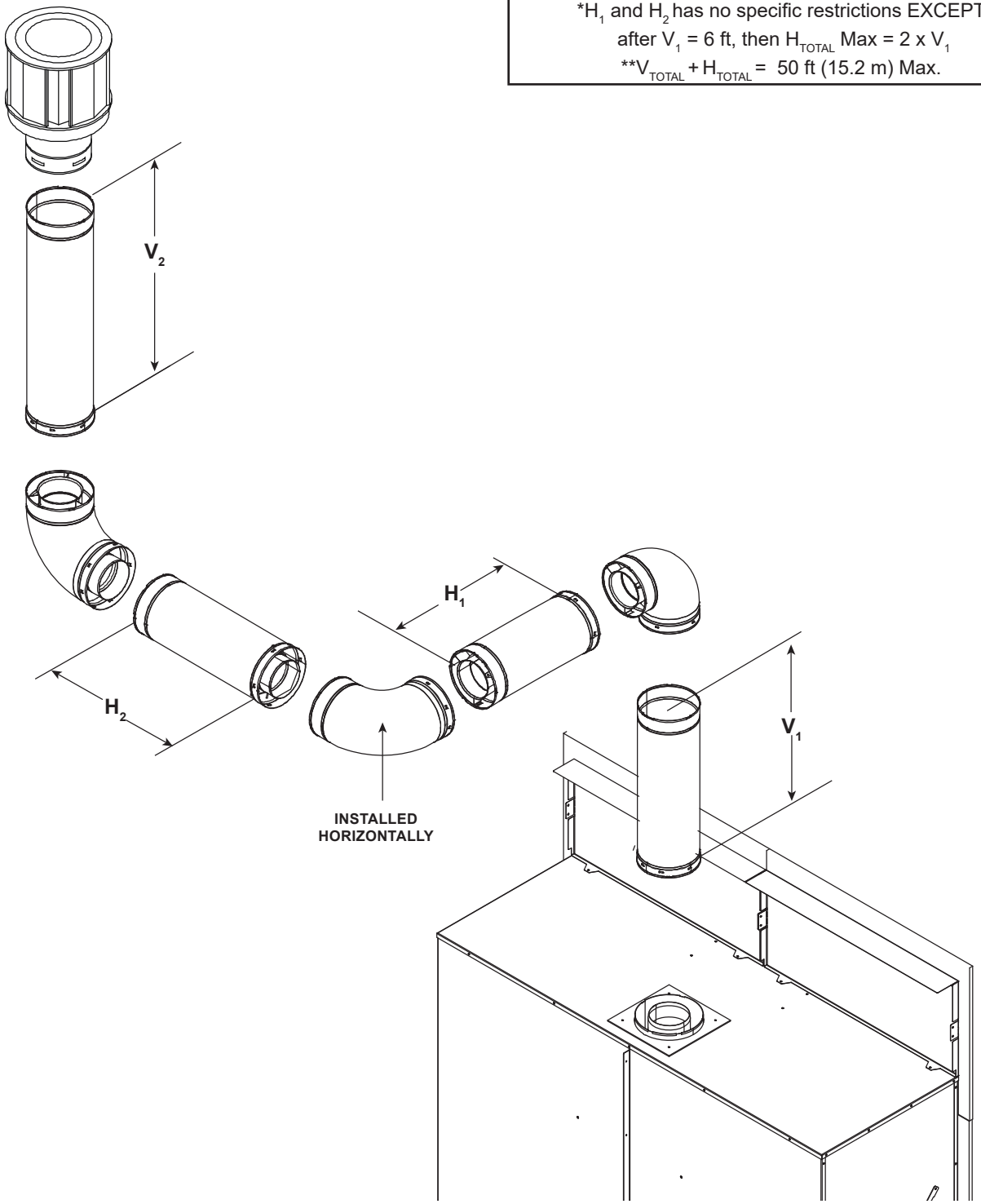

Figure 4.15

G. PVLP-SLP and PVI-SLP-B Information

This section provides specific detail for installation of TRUE-36, TRUE-42, and TRUE-50 models with approved power vent kits. Follow instructions included with the PVLP-SLP or PVI-SLP-B power vent kits.

See Table 4.2 below for approved Power Venting options for TRUE models.

WARNING! Risk of Fire! *Use ONLY Hearth & Home Technologies-approved power venting systems with this appliance. Use of power venting systems not approved by Hearth & Home Technologies could cause fireplace to overheat.*

	PVLP-SLP	PVI-SLP-B
TRUE-36	APPROVED	APPROVED
TRUE-42	APPROVED	APPROVED
TRUE-50	APPROVED	APPROVED

Table 4.2

WARNING! Risk of Explosion! *Follow instructions to set draft flow. Incorrect setting could impair burner performance and/or cause delayed ignition.*

The power vent draft flow must be adjusted and set per the specifications in Table 4.3. Refer to the instructions provided with the PVLP-SLP and PVI-SLP-B for more specific information.

Setting the PVLP-SLP Baffle Adjustment:

Note: The air baffle may be adjusted after installation. The baffle adjustment screw can be accessed by removing the front cap cover.

- If the burner flames are short, active, and jumping, turn the bolt counterclockwise (open). check the burner flames and adjust the baffle again as necessary until the flames are stable, strong, and steady.
- If the burner flames are tall, lifting, floating, and ghost-like, the baffle is too far open and MUST be closed. Turn bolt clockwise.
- If the pilot continuously sparks and does not become steady, the baffle may need to be opened. The requirements in Table 4.3. must still be met.

Distance from PVLP-SLP to Appliance	Allowable Baffle	
	Minimum	Maximum
2-15 ft.	1-1/2 in.	2-1/2 in.
16-39 ft.	Closed	1-1/2 in.
Greater than 40	Closed	

Table 4.3

PVI-SLP-B: The baffle adjustment is measured using the holes on the indicator bar of the PVI-SLP-B baffle. This bar raises as the baffle is opened and lowers as the baffle is closed. Adjust the baffle by turning the screw located in the motor enclosure. See Figure 4.16 and 4.17.

	PVI-SLP-B Baffle Adjustment Setting
TRUE-36 TRUE-42 TRUE-50	**3 Holes Visible**

Table 4.4

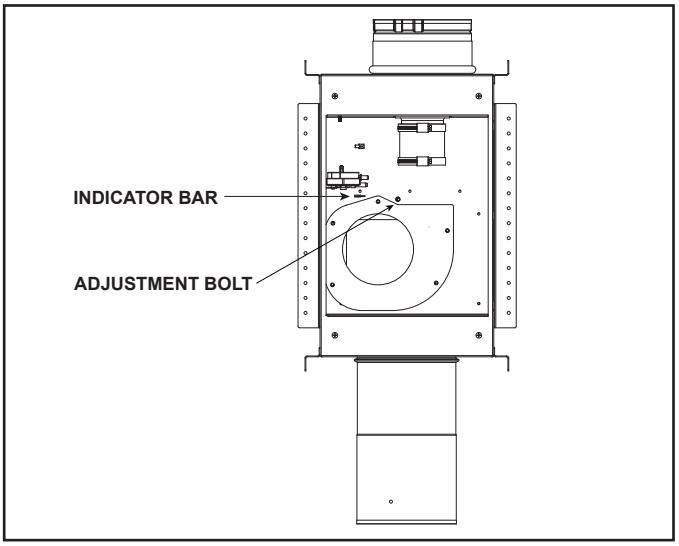

Figure 4.16 Baffle Adjustment Location - PVI-SLP-B

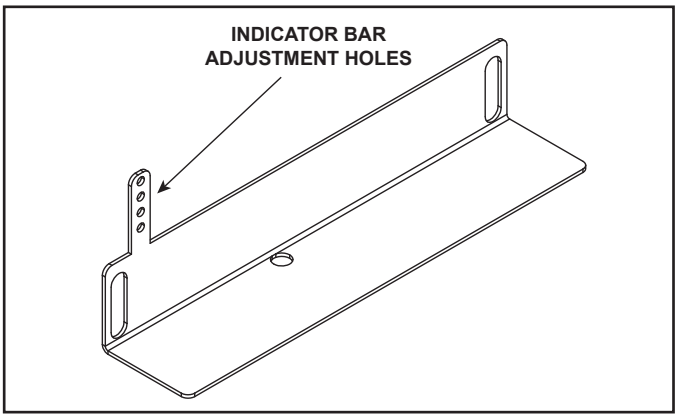

Figure 4.17 Baffle Adjustment - PVI-SLP-B

5 Vent Clearances and Framing

A. Pipe Clearances to Combustibles

WARNING! Risk of Fire! *Maintain air space clearance to vent.* ***DO NOT*** *pack insulation or other combustibles:*

- *Between ceiling firestops*
- *Between wall shield firestops*
- *Around vent system*

Failure to keep insulation or other material away from vent pipe could cause overheating and fire.

Note: Heat shields MUST overlap by a minimum of 1-1/2 in. (38 mm).
- **DVP heat shield** - designed to be used on a wall 4 in. to 7-1/4 in. (102 mm to 184 mm) thick.
- If wall thickness is less than 4 in. the existing heat shields must be field trimmed. If wall thickness is greater than 7-1/4 in. a DVP-HSM-B will be required.
- If wall thickness is less than 4-3/8 the existing heat shields must be field trimmed. If wall thickness is greater than 7-5/8 in. a DVP-HSM-B will be required.

(DVP Pipe Shown)

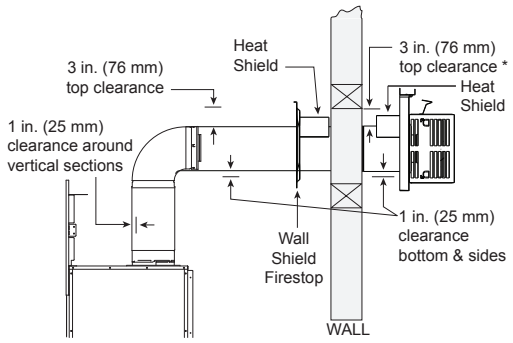

Figure 5.1 Horizontal Venting Clearances To Combustible Materials

B. Wall Penetration Framing/Firestops

Combustible Wall Penetration

Whenever a combustible wall is penetrated, you must frame a hole for the wall shield firestop(s). The wall shield firestop maintains minimum clearances and prevents cold air infiltration.

- The opening must be framed on all four sides using the same size framing materials as those used in the wall construction.
- DVP pipe - A wall shield firestop is required on one side only on interior walls. If your local inspector requires a wall shield firestop on both sides, then both wall shield firestops must have a heat shield (refer to Section 12.A.) attached to them.
- See Section 7.E. for information for regarding the installation of a horizontal termination cap.

Non-Combustible Wall Penetration

If the hole being penetrated is surrounded by non-combustible materials such as concrete, a hole with diameter one inch greater than the pipe is acceptable.

Whenever a non-combustible wall is penetrated, the wall shield firestop is only required on one side and no heat shield is necessary.

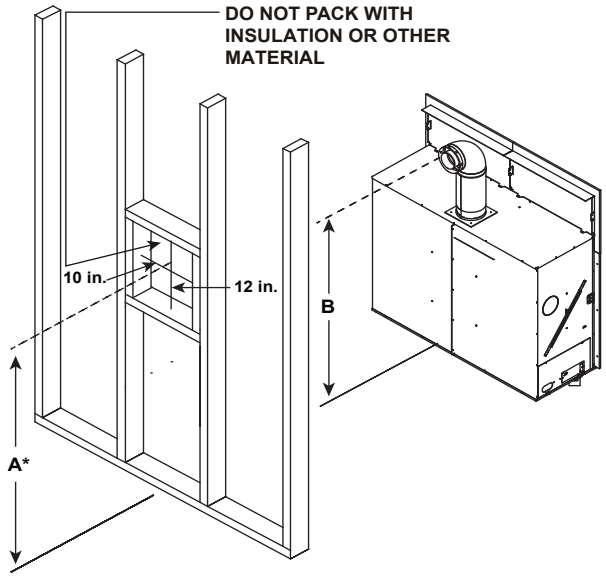

MODEL	A*	B
TRUE-36 NG/Propane	74-3/16 in.	73-3/16 in.
TRUE-42 NG	79-3/16 in.	78-3/16 in.
TRUE-42 Propane	91-3/16 in.	90-3/16 in.
TRUE-50 NG/Propane	83-3/16 in.	82-3/16 in.

* Shows center of vent framing hole with minimum vertical for top venting. The center of the hole is one (1) in. (25 mm) above the center of the horizontal vent pipe.

Figure 5.2 Wall Penetration

C. Ceiling Firestop/Floor Penetration Framing

A ceiling firestop **MUST** be used between floors and attics.

- **DVP pipe only** - Frame an opening 10 in. by 10 in. (254 mm by 254 mm) whenever the vent penetrates a ceiling/floor (see Figure 5.3).
- Frame the area with the same sized lumber as used in ceiling/floor joist.
- The ceiling firestop may be installed above or below the ceiling joists when installed with an attic insulation shield. It must be under joists between floors that are not insulated. Refer to Figure 5.4.
- Secure with three fasteners on each side.

WARNING! Risk of Fire! DO NOT pack insulation around the vent. Insulation must be kept back from the pipe to prevent overheating.

D. Install Attic Insulation Shield

***WARNING! Fire Risk. DO NOT** allow loose materials or insulation to touch vent. Hearth & Home Technologies requires the use of an attic shield.*

The International Fuel Gas Code requires an attic shield constructed of 26 gauge minimum steel that extends at least 2 in. (51 mm) above insulation.

- Attic insulation shields must meet specified clearances to combustible materials and be secured in place.
- An attic insulation shield kit is available from Hearth & Home Technologies. Contact your dealer to order. Install attic insulation shield according to instructions included with kit.

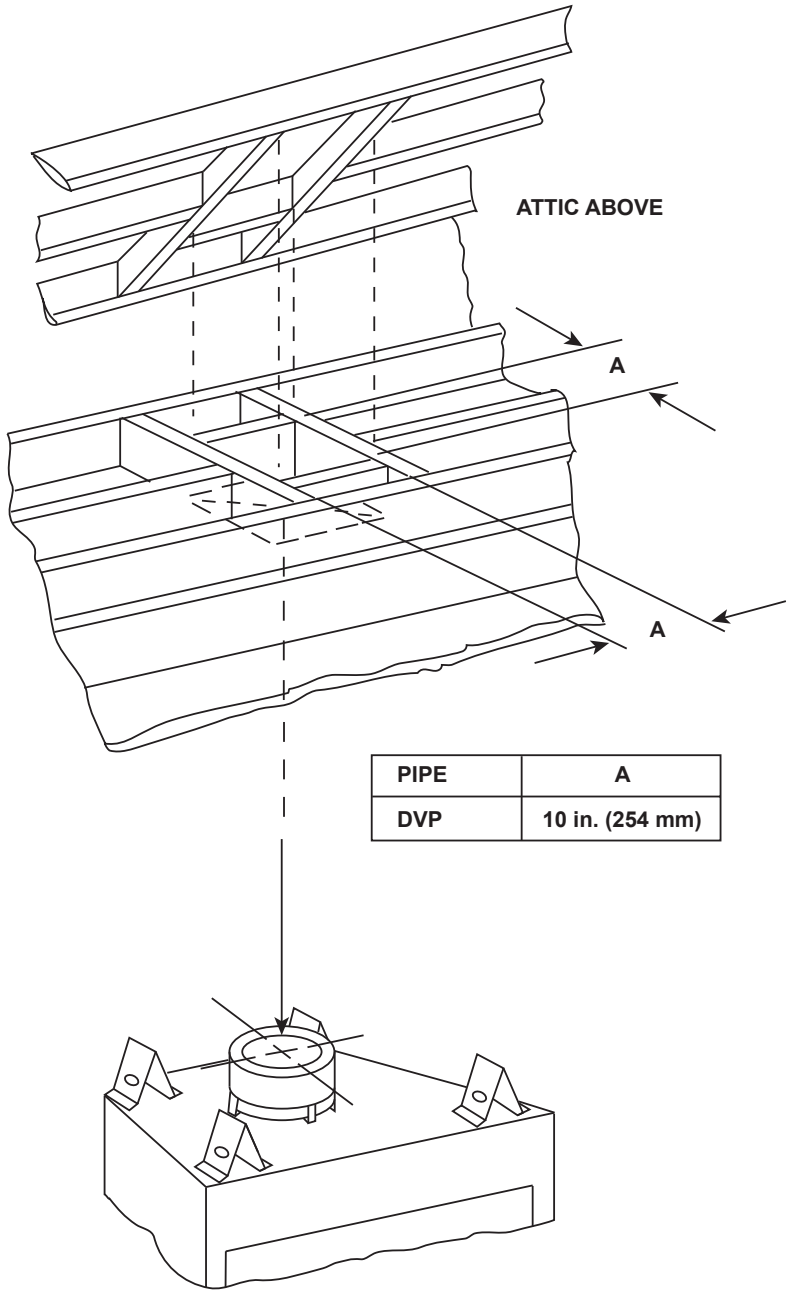

PIPE	A
DVP	10 in. (254 mm)

Figure 5.3 Installing Ceiling Firestop

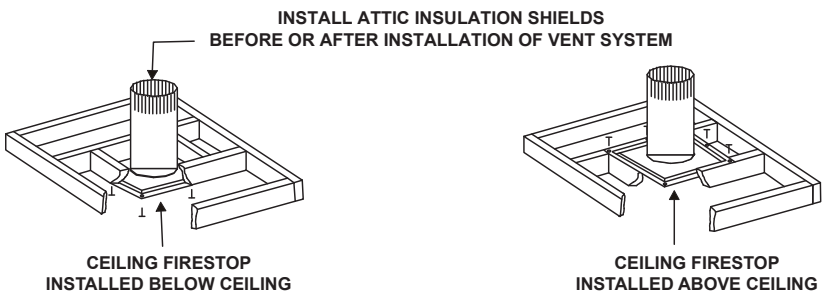

Figure 5.4 Installing the Attic Shield

E. Prepare for Heat Management

- Locate the heat management knockouts on the left and right sides of the appliance. See Figure 5.5. Remove one of the knockouts from the appliance with a tin snips.
- Center the duct collar around the exposed hole and attach it to the appliance with 3 screws.

  Note: Do this BEFORE final positioning of the appliance.
- Determine the location for the air register/fan housing assembly.

Refer to the instructions shipped with the heat management kit for the remaining installation steps.

Note: Only one heat management system may be used with this appliance and be controlled through the IFT remote control. An additional heat management kit may be added, however, it is recommended that it be wired through the appliance junction box. Refer to the instructions shipped with the heat management kit for more information.

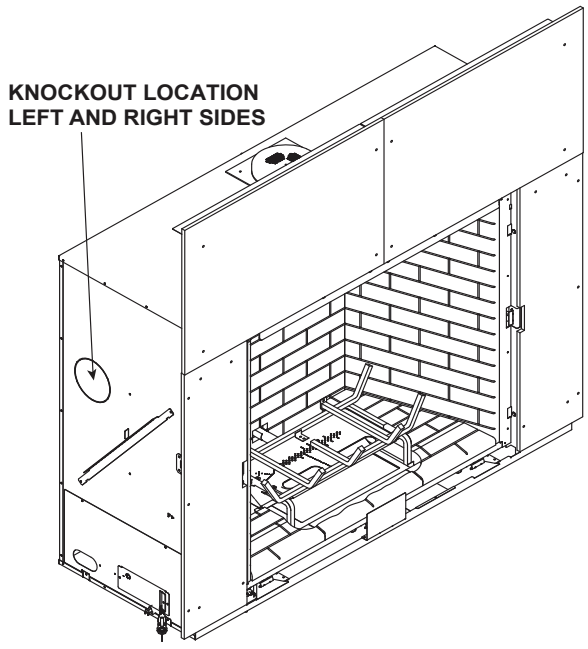

Figure 5.5 Heat Management Knockout Cover Plate

6 Appliance Preparation

A. Vent Collar Preparation

CAUTION! Risk of Cuts, Abrasions or Flying Debris. *Wear protective gloves and safety glasses during installation. Sheet metal edges are sharp.*

NOTICE: *This appliance is top vented ONLY.*

1. Remove shrink wrap from appliance. Figure 6.1 shows the shipping location of the seal cap and heat shields (Section 6), splatter guard and finishing templates (Section 10), and the logs and Teco-Sil (Section 11). For TRUE-36G-IFT and TRUE-42G-IFT models, the glass refractory is also shipped with the appliance. See Figure 6.1.

NOTE: Header heat shields and finish trim on TRUE-G models are attached to appliance on the rear corner and must be removed using a 1/4 inch nut driver. See Figure 6.3.

2. Remove seal cap from top of appliance by removing one screw, which is included, to prevent construction material from getting into appliance. Remove seal cap when pipe installation phase begins. See Figure 6.2.
3. Ensure gasket seal is in place prior to installing vent pipe sections. Gasket is installed at the factory.

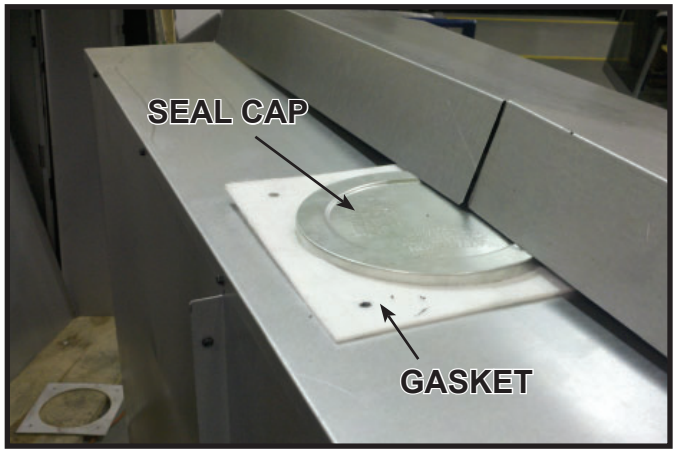

Figure 6.2 Seal Cap and Gasket Location

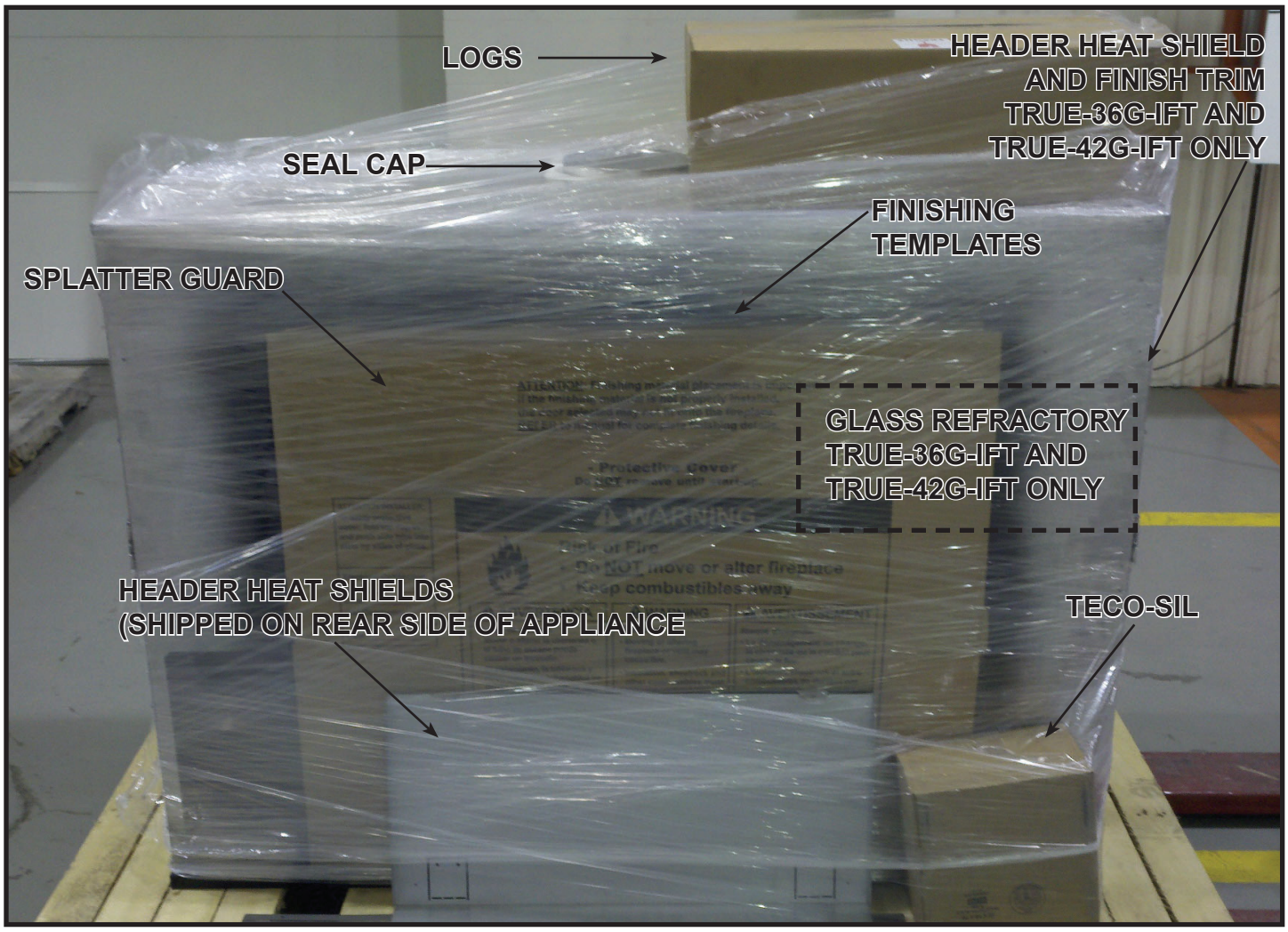

Figure 6.1 Shipping Location of Components

Figure 6.3. Shipping Location of Header Heat Shields and Finish Trim Pieces - TRUE-36G-IFT and TRUE-42G-IFT

B. Securing and Leveling the Appliance

WARNING! Risk of Fire! *Prevent contact with:*

- *Sagging or loose insulation*
- *Insulation backing or plastic*
- *Framing and other combustible materials*

Block openings into the chase to prevent entry of blown-in insulation. Make sure insulation and other materials are secured.

***DO NOT** notch the framing around the appliance standoffs.*

Failure to maintain air space clearance could cause overheating and fire.

Nailing tabs are provided on the appliance and on the heat shields to secure the appliance to the framing members. See Figure 6.4 and Figure 6.6 for location of nailing tabs in shipping position.

- Bend out side nailing tabs 90 degrees. See Figure 6.5.
- Place the appliance into position.
- Keep side nailing tabs flush with the framing.
- Level the appliance from side to side and front to back.
- Shim the appliance as necessary. It is acceptable to use wood shims underneath the appliance.
- Position and install heat shields by securing two screws in each heat shield. See Figure 6.1 for shipping location of heat shields. The heat shield screws can be found pre-installed on the top of the appliance.
- Bend the top header heat shields upward to position them vertically and bend out the two nailing tabs on the top of each header heat shield. Secure to framing. See Figure 6.6.
- Secure the appliance to the framing by using nails or screws through the nailing tabs.
- Optional: Secure the appliance to the floor by inserting two screws through the pilot holes at the bottom of the appliance.

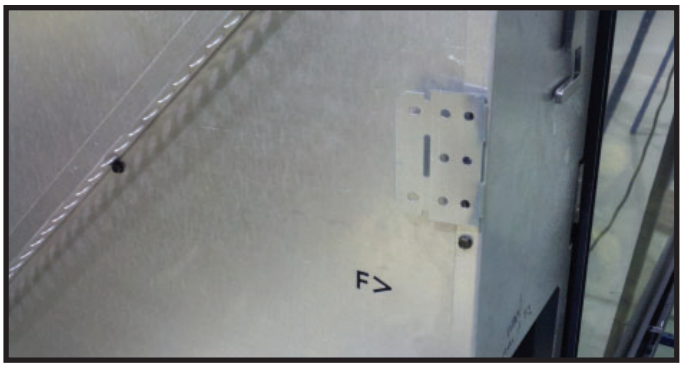

Figure 6.4 Side Nailing Tab in Shipping Position

Figure 6.5 Nailing Tab Bent Out for Installation

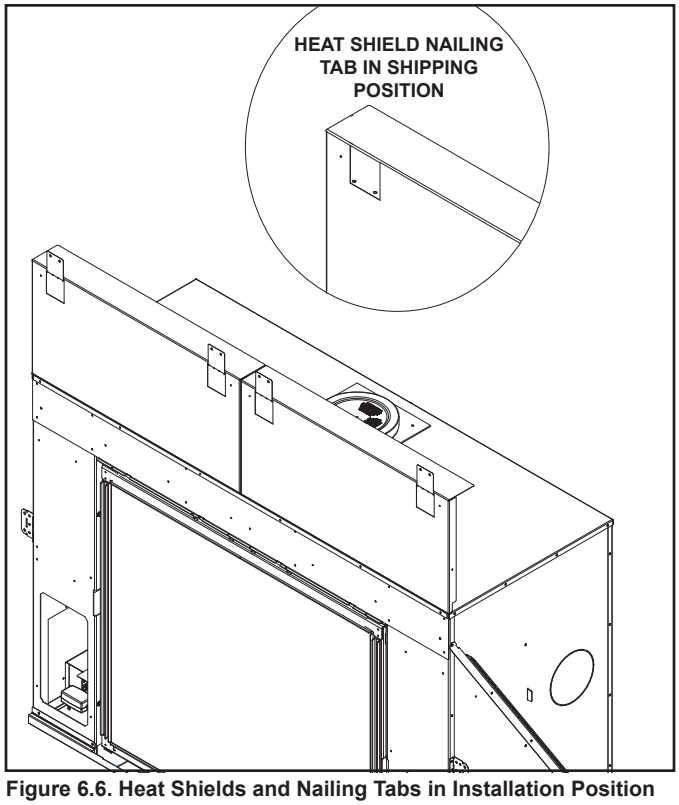

Figure 6.6. Heat Shields and Nailing Tabs in Installation Position

C. Installing Non-Combustible Facing Material

WARNING! Risk of Fire!

- *Follow these instructions exactly.*
- *Facing materials must be installed properly to prevent fire.*
- *No materials may be substituted without authorization by Hearth & Home Technologies.*

- The finishing templates are shipped fastened to the top surround. Remove finishing templates prior to installing non-combustible board.
- Remove non-combustible facing pieces from back of appliance. See Figure 6.7.
- Install non-combustible facing material to the appliance using the screws supplied in the manual bag assembly.
- Center and attach two top boards to the framing members. See Figure 6.8.
- Attach left and right side pieces to framing members.
- Use fasteners from fastener packet (in manual bag) for screws that secure to the fireplace. See Figure 6.8.
- Use regular sheetrock screws or nails to secure the perimeter of the non-combustible facing materials to the wood framing. See Figure 6.8.
- Use a wet or dry towel or soft brush to remove dust or dirt from facing material.
- See Section 10 for finishing materials guidelines.

Figure 6.7 Shipping Location of Non-Combustible Board

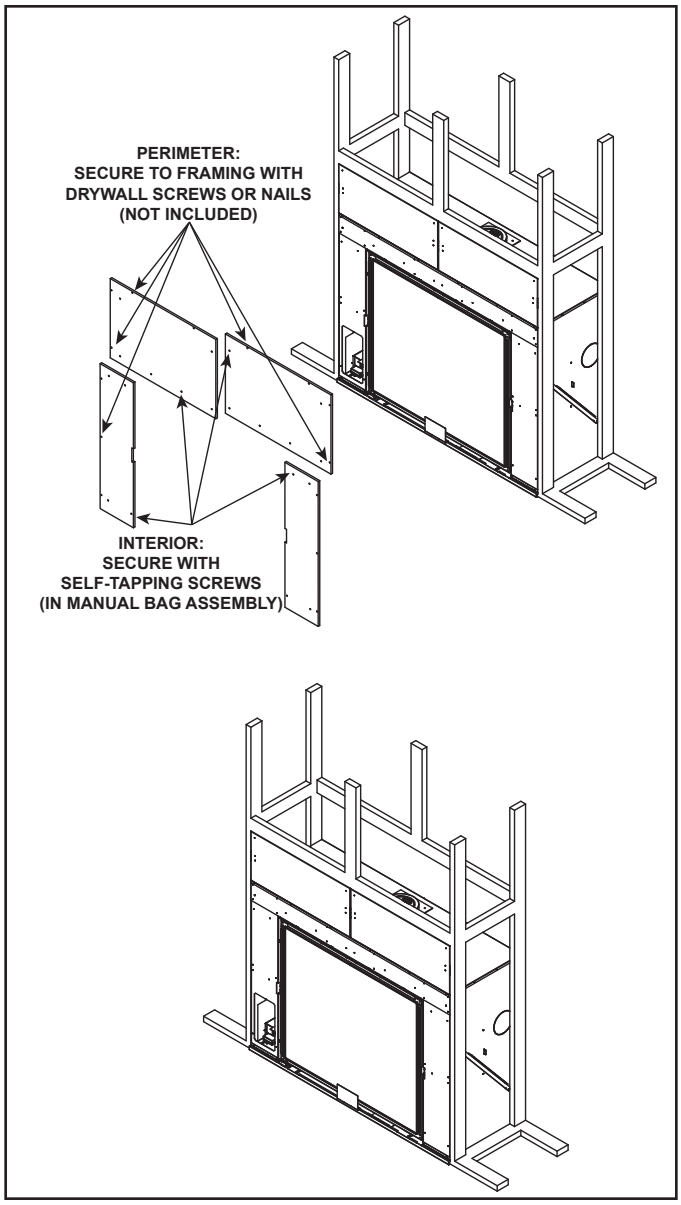

Figure 6.8 Installing Non-Combustible Facing Material

7 Venting and Chimneys

A. Assemble Vent Sections

Attach Vent to the Firebox Assembly

Note: The end of the pipe sections with the lanced tabs will face toward the appliance.
Attach the first pipe section to the starting collar:

- Lanced pipe end of the starting collar.
- Inner pipe over inner collar.
- Push the pipe section until all lanced tabs snap in place.
- Lightly tug on pipe to confirm it has locked.

Required Commercial, Multi-family (Multi-level exceeding two stories), or High-Rise Applications

All outer pipe joints must be sealed with 100% silicone (300 ºF minimum continuous exposure rating), including the slip section that connects directly to the horizontal termination cap.

- Apply a bead of silicone sealant (300 ºF minimum continuous exposure rating) inside the female outer pipe joint prior to joining sections. See Figure 7.1. **OR**
  Apply a bead of silicone sealant (300 ºF minimum continuous exposure rating) to the outside of connecting joint after joining sections **OR**
  Apply aluminum foil tape (300 ºF minimum continuous exposure rating) to the outside of connecting joint after joining sections. On horizontal pipe runs, it is recommended that the tape seam is positioned on the bottom side of the vent pipe.
- Only outer pipes need to be sealed. All unit collar, pipe, slip section, elbow and cap outer flues shall be sealed in this manner, unless otherwise stated.

***WARNING! Risk of Fire or Explosion! DO NOT** break silicone seals on slip sections. Use care when removing termination cap from slip pipe. If slip section seals are broken during removal of the termination cap, vent could leak.*

Assemble Pipe Sections

Per Figure 7.2:

- Start the inner pipe on the lanced end of section A into the flared end of section B.
- Start the outer pipe of section A over the outer pipe of section B.
- Once both vents sections are started, push firmly until all lanced tabs lock into place.
- Lightly tug on the pipe to confirm the tabs have locked.

It is acceptable to use screws no longer than 1/2 in. (13 mm) to hold outer pipe sections together. If predrilling holes, **DO NOT** penetrate inner pipe.

For 90º and 45º elbows that are changing the vent direction from horizontal to vertical, one screw minimum should be put in the outer flue at the horizontal elbow joint to prevent the elbow from rotating. Use screws no longer than 1/2 in. (13 mm). If predrilling screw holes, **DO NOT** penetrate inner pipe.

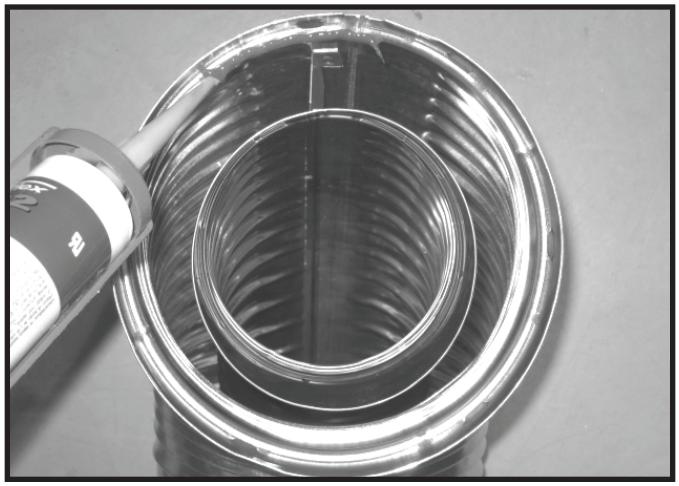

Figure 7.1 High Temperature Silicone Sealant

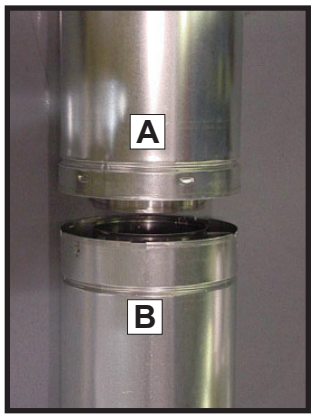

Figure 7.2

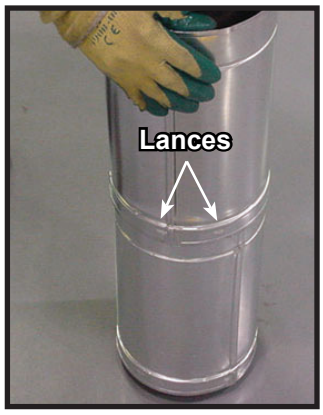

Figure 7.3

Note: Make sure that the seams are not aligned to prevent unintentional disconnection.

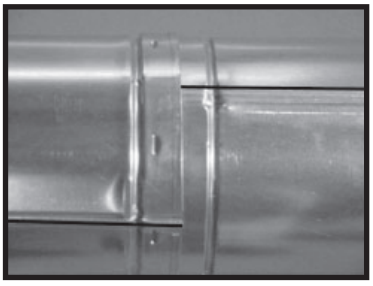

CORRECT

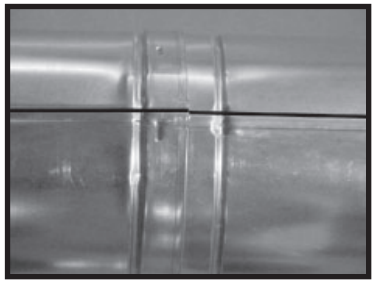

INCORRECT

Figure 7.4 Seams

B. Secure the Vent Sections

- Vertical runs originating off the top of the appliance, with no offsets, must be supported every 8 ft. (2.44 m) after the maximum allowed 25 ft. (7.62 m) of unsupported rise.
- Vertical runs originating off the rear of the appliance, or after any elbow, must be supported every 8 ft. (2.44 m).
- Horizontal runs must be supported every 5 feet (1.52 m).
- Vent supports or plumbers strap (spaced 120º apart) may be used to support vent sections. See Figures 7.5 and 7.6.
- Wall shield firestops may be used to provide horizontal support to vent sections.
- SLP ceiling firestops have tabs that may be used to provide vertical support.

WARNING! Risk of Fire, Explosion or Asphyxiation! *Improper support may allow vent to sag and separate. Use vent run supports and connect vent sections per installation instructions.* ***DO NOT*** *allow vent to sag below connection point to appliance.*

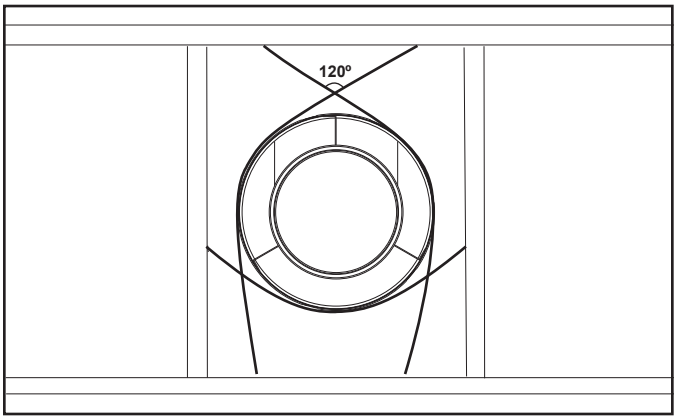

Figure 7.5 Securing Vertical Pipe Sections

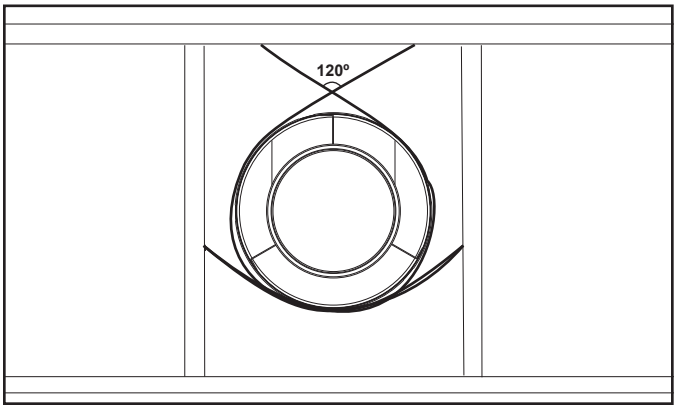

Figure 7.6 Securing Horizontal Pipe Sections

C. Disassemble Vent Sections

- Rotate either section (see Figure 7.7) so the seams on both pipe sections are aligned as shown in Figure 7.8.
- Pull carefully to separate the pieces of pipe.

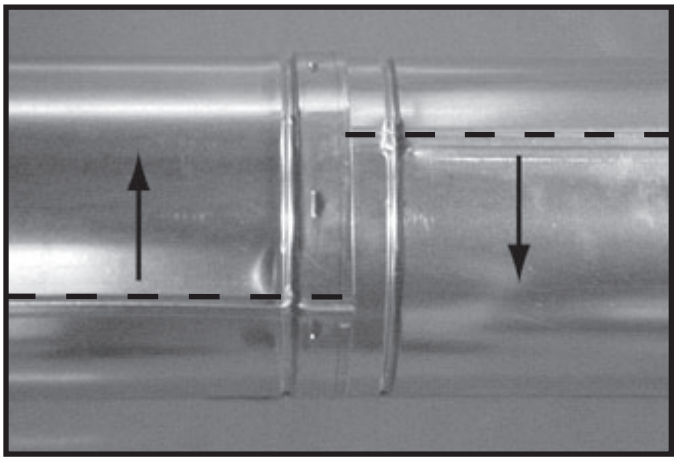

Figure 7.7 Rotate Seams for Disassembly

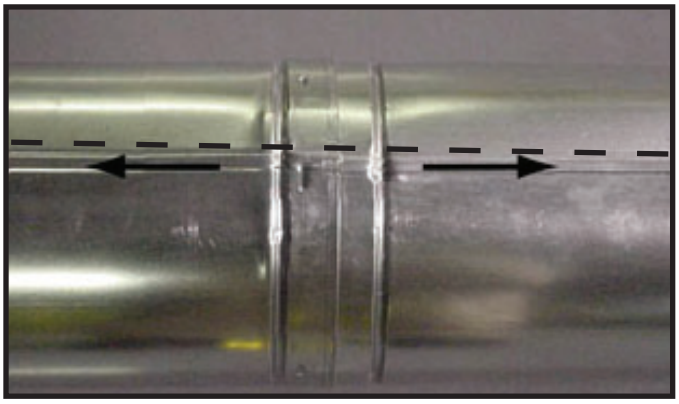

Figure 7.8 Align and Disassemble Vent Sections

D. Vertical Termination Requirements

Install Metal Roof Flashing

- See minimum vent heights for various pitched roofs (Figure 7.9) to determine the length of pipe to extend through the roof.
- Slide the roof flashing over the pipe sections extending through the roof as shown in Figure 7.10.

Note: When installing a silicone or EPDM pipe flashing boot on a metal roof, it is recommended to put a bead of 100% silicone sealant where the boot contacts the vent pipe to prevent the entry of water. Follow the manufacturer's recommendations when installing the boot. Climate regions with frequent temperatures below - 50 °F (-45.6 °C) should use a silicone flashing boot.

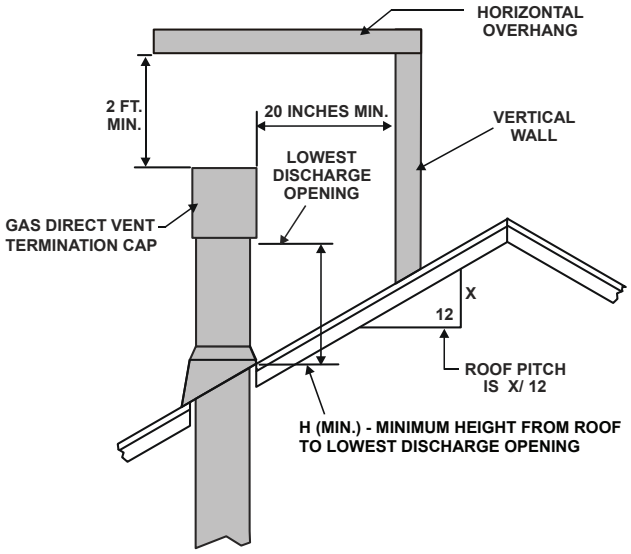

Roof Pitch	H (Min.) Ft.
Flat to 6/12	1.0*
Over 6/12 to 7/12	1.25*
Over 7/12 to 8/12	1.5*
Over 8/12 to 9/12	2.0*
Over 9/12 to 10/12	2.5*
Over 10/12 to 11/12	3.25
Over 11/12 to 12/12	4.0
Over 12/12 to 14/12	5.0
Over 14/12 to 16/12	6.0
Over 16/12 to 18/12	7.0
Over 18/12 to 20/12	7.5
Over 20/12 to 21/12	8.0

* H minimum may vary depending on regional snowfall. Refer to local codes.

Figure 7.9 Minimum Height From Roof To Lowest Discharge Opening

NOTICE: *Failure to properly caulk the roof flashing and pipe seams could permit entry of water.*

- Caulk the gap between the roof flashing and the outside diameter of the pipe.
- Caulk the perimeter of the flashing where it contacts the roof surface. See Figure 7.10.
- Caulk the overlap seam of any exposed pipe sections that are located above the roof line.

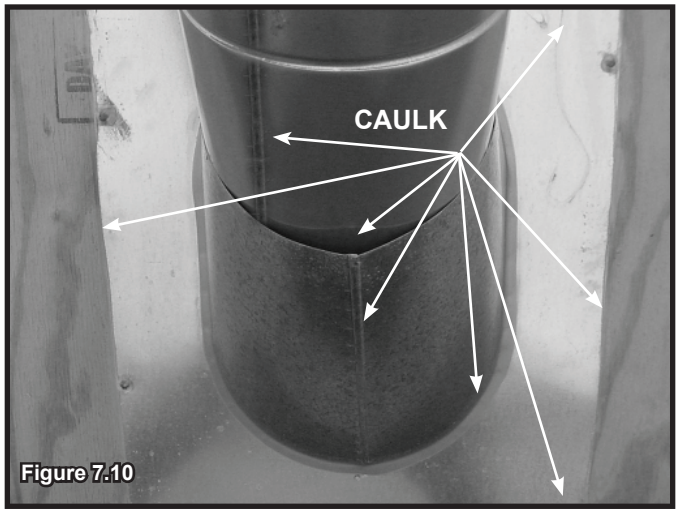

Figure 7.10

Assemble and Install Storm Collar

CAUTION! Risk of Cuts, Abrasions or Flying Debris. *Wear protective gloves and safety glasses during installation. Sheet metal edges are sharp.*

- Slide the storm collar onto the exposed pipe section and align brackets.
- Insert a bolt (provided) through the brackets and install nut. Do not completely tighten.

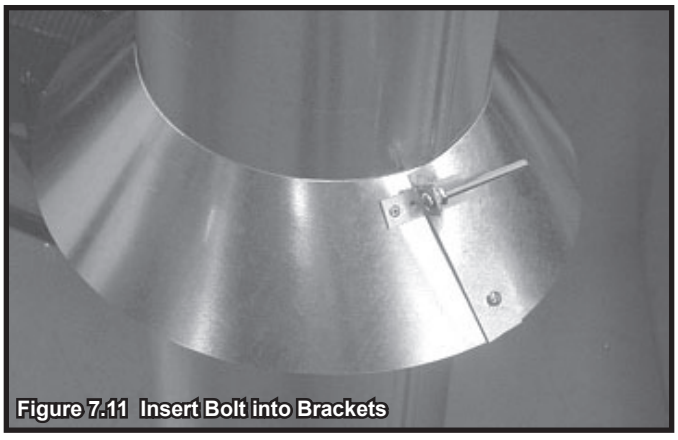
Figure 7.11 Insert Bolt into Brackets

- Slide the assembled storm collar down the pipe section until it rests on the roof flashing. See Figure 7.11.
- Tighten nut and make sure the collar is tight against the pipe section.
- Caulk around the top of the storm collar. See Figure 7.12.

Install Vertical Termination Cap

- Attach the vertical termination cap by sliding the inner collar of the cap into the inner flue of the pipe section while placing the outer collar of the cap over the outer flue of the pipe section.
- Secure the cap by driving three self-tapping screws (supplied) through the pilot holes in the outer collar of the cap into the outer flue of the pipe. See Figure 7.12.

Figure 7.12

E. Horizontal Termination Requirements

Heat Shield Requirements for Horizontal Termination

WARNING! Risk of Fire! *To prevent overheating and fire, heat shields must extend through the entire wall thickness.*

- ***DO NOT*** *remove the heat shields attached to the wall shield firestop and the horizontal termination cap (shown in Figure 7.13).*
- *Heat shields must overlap 1-1/2 in. (38 mm) minimum.*

There are two sections of the heat shield. One section is factory-attached to the wall shield firestop. The other section is factory-attached to the cap. See Figure 7.13.

If the wall thickness does not allow the required 1-1/2 in. (38 mm) heat shield overlap when installed, an extended heat shield must be used.

- If the wall thickness is less than 4 in./102 mm, the heat shields on the cap and wall shield firestop must be trimmed. A minimum 1-1/2 in. (38 mm) overlap MUST be maintained.
- Use an extended heat shield if the finished wall thickness is greater than 7-1/4 in. (184 mm).
- The extended heat shield may need to be cut to length maintaining sufficient length for a 1-1/2 in. (38 mm) overlap between heat shields.
- Attach the extended heat shield to either of the existing heat shields using the screws supplied with the extended heat shield. Refer to vent components diagrams in the back of this manual.
- Rest the small leg on the extended heat shield on top of the pipe section to properly space it from the pipe section.

Important Notice: Heat shields may <u>not</u> be field constructed.

Install Horizontal Termination Cap

WARNING! Risk of Fire! *The telescoping flue section of the termination cap MUST be used when connecting vent.*

- *1-1/2 (38 mm) minimum overlap of flue telescoping section is required.*

Failure to maintain overlap could cause overheating and fire.

- Vent termination must not be recessed in the wall. Siding may be brought to the edge of the cap base.
- Flash and seal as appropriate for siding material at outside edges of cap.
- When installing a horizontal termination cap, follow the cap location guidelines as prescribed by current **ANSI Z223.1** and **CAN/CGA-B149** installation codes and refer to Section 4 of this manual.

CAUTION! Risk of Burns! *Local codes may require installation of a cap shield to prevent anything or anyone from touching the hot cap.*

NOTICE: *For certain exposures which require superior resistance to wind-driven rain penetration, a flashing kit and HRC caps are available. When penetrating a brick wall, a brick extension kit is available for framing the brick.*

Note: When using termination caps with factory-supplied heat shield attached, no additional wall shield firestop is required on the exterior side of a combustible wall.

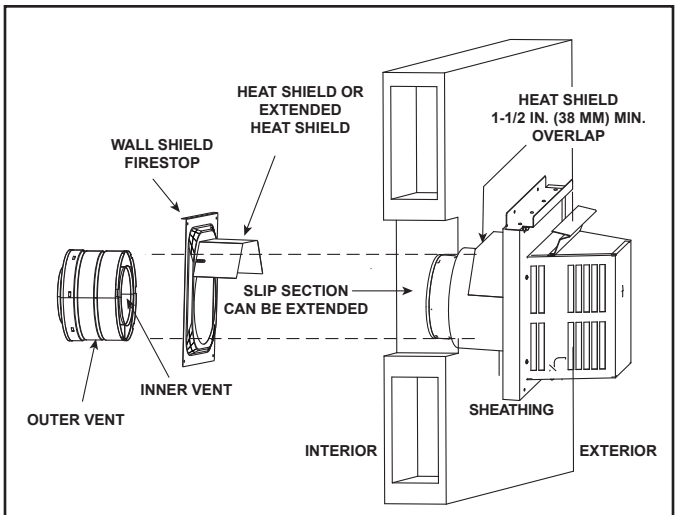

Figure 7.13 Venting Through the Wall

8 Electrical Information

A. General Information

WARNING! Risk of Shock or Explosion! DO NOT *wire 110-120 VAC to the valve or to the appliance wall switch. Incorrect wiring will damage controls.*

NOTICE: *This appliance must be electrically wired and grounded in accordance with local codes or, in the absence of local codes, with* **National Electric Code ANSI/NFPA 70-latest edition** *or the* **Canadian Electric Code CSA C22.1.**

- Wire the appliance junction box to unswitched 110-120 VAC. This is required for proper operation of the appliance.
- A 110-120 VAC circuit for this product must be protected with ground-fault circuit-interrupter protection, in compliance with the applicable electrical codes, when it is installed in locations such as in bathrooms or near sinks.
- Low voltage and 110-120 VAC voltage cannot be shared within the same wall box.

Junction Box Installation

The electrical junction box can be accessed three ways during installation:

1. Through the side electrical access:
   - Remove two screws to release junction box bracket from the access plate. See Figure 3.2 and Figure 8.2.
2. Through the front left column (behind the factory-installed non-combustible board):
   - From inside remove one screw that secures junction box to junction box bracket. See Figure 8.1 and Figure 8.2.
3. Through the firebox:
   - From inside remove one screw that secures junction box to junction box bracket. See Figure 8.1 and Figure 8.2.

- Pull the electrical wires from outside the appliance through the opening into the valve compartment and secure wires with a Romex connector. See Figure 8.2
- Make all necessary wire connections to the junction box/receptacle and reattach the junction box/receptacle to the outer shell.

ACCESS THROUGH LEFT COLUMN
(Prior to installation of non-combustible board)

ACCESS THROUGH FIREBOX
(After installation of non-combustible board)

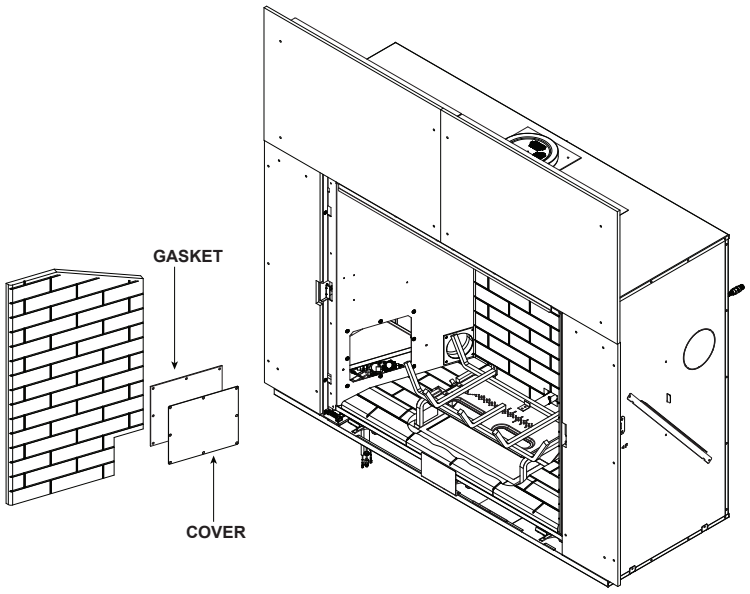

Figure 8.1 Junction Box Access

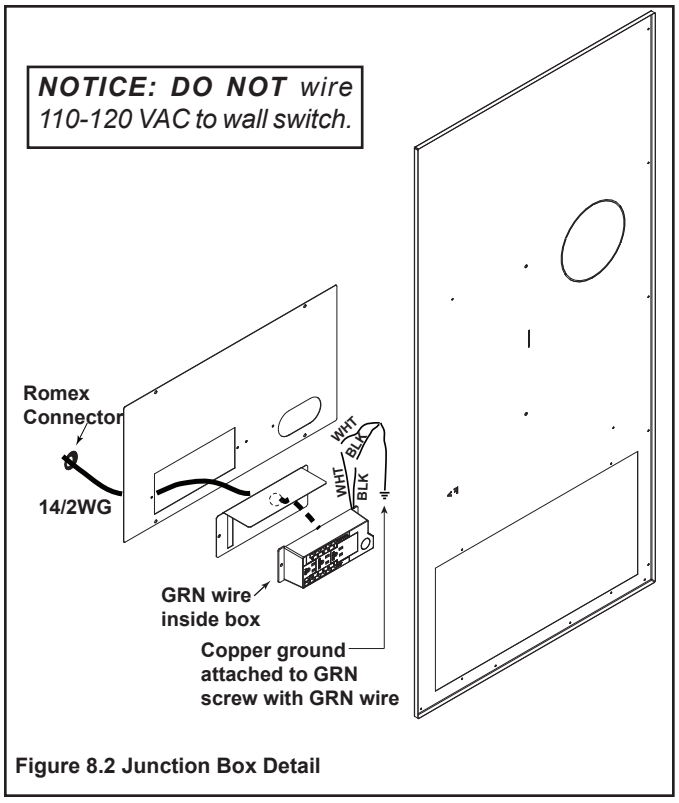

Figure 8.2 Junction Box Detail

Accessories Requirements

- This appliance may be used with a wall switch, wall mounted thermostat and/or a remote control.

Wiring for optional Hearth & Home Technologies approved accessories should be done now to avoid reconstruction. Follow instructions that come with those accessories.

- Hearth & Home Technologies recommends that IntelliFire Touch wireless controls be used for their features and functionality with the IntelliFire Touch ignition system.

Electrical Service and Repair

WARNING! Risk of Shock! *Label all wires prior to disconnection when servicing controls. Wiring errors could cause improper and dangerous operation. Verify proper operation after servicing.*

WARNING! Risk of Shock! *Replace damaged wire with type 105º C rated wire. Wire must have high temperature insulation.*

B. Wiring Requirements

IntelliFire Touch® Ignition System Wiring

- Wire the appliance junction box to 110-120 VAC for proper operation of the appliance.

WARNING! Risk of Shock or Explosion! DO NOT *wire IPI controlled appliance junction box to a switched circuit. Incorrect wiring will override IPI safety lockout.*

- Refer to Figure 8.3, IPI Wiring Diagram.
- This appliance is equipped with an IntelliFire Touch control valve which operates on a 6 volt/1.5 AMP system.
- Plug the 6 volt transformer plug into the appliance junction box to supply power to the unit OR install 4 AA cell batteries (not included) into the battery pack before use.

NOTICE: *Batteries should only be used as a power source in the event of an emergency power outage. Batteries should not be used as a primary long-term power source. Battery polarity must be correct when installing batteries. When using batteries as a power source, the 6-volt transformer must be unplugged from the receptacle.*

Do not store batteries in the battery pack when the appliance is powered by the 6 volt transformer connected to permanent electrical service.

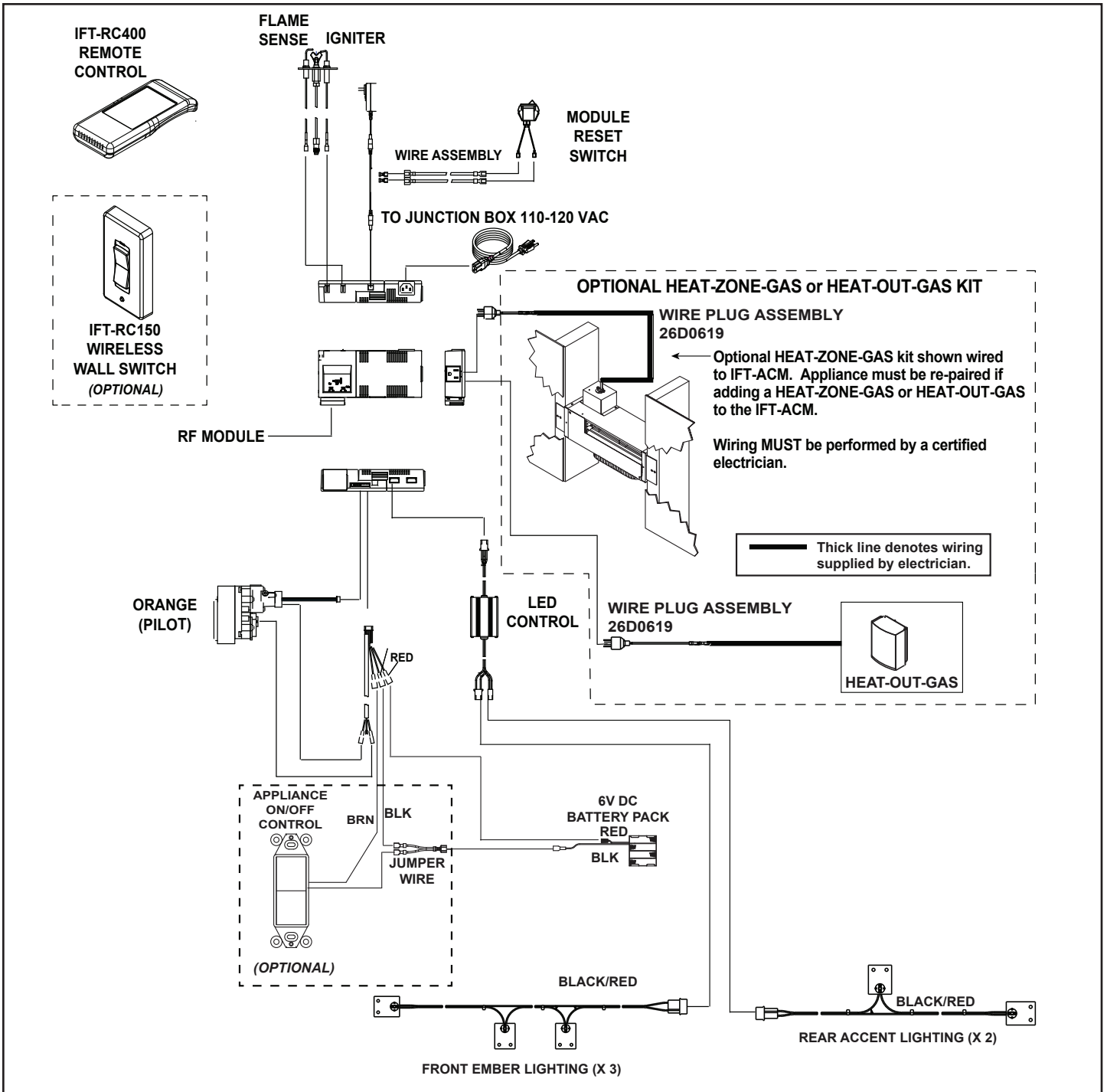

Figure 8.3 Intellifire Touch Wiring Diagram

9 Gas Information

A. Fuel Conversion

- Make sure the appliance is compatible with available gas types.
- Conversions must be made by a qualified service technician using Hearth & Home Technologies specified and approved parts.

B. Gas Pressure

- Optimum appliance performance requires proper input pressures.
- Gas line sizing requirements will be determined in ANSI Z223.1 National Fuel Gas Code in the USA and CAN/CGA B149 in Canada.
- Pressure requirements are:

Gas Pressure	Natural Gas	Propane
Minimum inlet pressure	5.0 in. w.c.	11.0 in. w.c.
Maximum inlet pressure	10.0 in. w.c.	13.0 in. w.c.
Manifold pressure	3.5 in. w.c.	10.0 in. w.c.

WARNING! Risk of Fire or Explosion! *High pressure will damage valve. Low pressure could cause explosion.*

- Verify inlet pressures. Verify minimum pressures when other household gas appliances are operating.
- Install regulator upstream of valve if line pressure is greater than 1/2 psig.

⚠ WARNING

Fire Risk.

Explosion Hazard.

High pressure will damage valve.

- Disconnect gas supply piping BEFORE pressure testing gas line at test pressures above 1/2 psig.
- Close the manual shutoff valve BEFORE pressure testing gas line at test pressures equal to or less than 1/2 psig.

Note: Have the gas supply line installed in accordance with local codes, if any. If not, follow ANSI Z223.1. Installation should be done by a qualified installer approved and/or licensed as required by the locality. (In the Commonwealth of Massachusetts installation must be performed by a licensed plumber or gas fitter).

Note: A listed (and Commonwealth of Massachusetts approved) 1/2 in. (13 mm) T-handle manual shut-off valve and flexible gas connector are connected to the 1/2 in. (13 mm) control valve inlet.

- **If substituting for these components, please consult local codes for compliance.**

C. Gas Connection

- Refer to Section 3 for location of gas line access in appliance.
- Gas line may be run through knockout(s) provided.
- The gap between supply piping and gas access hole may be caulked with caulk with a minimum of 300 ºF continuous exposure rating or stuffed with non-combustible, unfaced insulation to prevent cold air infiltration.
- Ensure that gas line does not come in contact with outer wrap of the appliance. Follow local codes.
- Pipe incoming gas line into valve compartment.
- Connect incoming gas line to the 1/2 in. (13 mm) connection on manual shutoff valve.

WARNING! Risk of Fire or Explosion! *Support control when attaching pipe to prevent bending gas line.*

- A small amount of air will be in the gas supply lines.

WARNING! Risk of Fire or Explosion! *Gas build-up during line purge could ignite.*

- *Purge should be performed by qualified service technician.*
- *Ensure adequate ventilation.*
- *Ensure there are no ignition sources such as sparks or open flames.*

Light the appliance. It will take a short time for air to purge from lines. When purging is complete the appliance will light and operate normally.

WARNING! Risk of Fire, Explosion or Asphyxiation! *Check all fittings and connections with a non-corrosive commercially available leak-check solution.* ***DO NOT*** *use open flame. Fittings and connections could have loosened during shipping and handling.*

WARNING! Risk of Fire! DO NOT *change valve settings. This valve has been preset at the factory.*

D. High Altitude Installations

NOTICE: *If the heating value of the gas has been reduced, these rules do not apply. Check with your local gas utility or authorities having jurisdiction.*

When installing above 2000 feet elevation:

- In the USA: Reduce input rate 4% for each 1000 feet above 2000 feet.
- In CANADA: Input ratings are certified without a reduction of input rate for elevations up to 4500 feet (1370 m) above sea level. Please consult provincial and/or local authorities having jurisdiction for installations at elevations above 4500 feet (1370 m).

Check with your local gas utility to determine proper orifice size.

E. Air Shutter Setting

Air shutter settings should be adjusted by a qualified service technician at the time of installation. The air shutter is pre-set at the factory for minimum vertical, maximum horizontal vent run for this appliance: 2 ft. vertical and 7 in. horizontal).

Factory Pre-Set Air Shutter Settings

MODEL	NG	PROPANE
TRUE-36	1/2 in.	Full Open
TRUE-42	11/16 in.	Full Open
TRUE-50	5/8 in.	Full Open

Natural Gas (NG) installations:

As a general rule, it is acceptable to reduce the shutter opening to adjust for vertical vent pipe sections prior to the initial fire up.

- Vertical Termination: May reduce shutter setting by 1/8 in.
- Horizontal Termination (more than 4 ft. vertical in vent configuration): May reduce shutter setting by 1/8 in.
- Horizontal Termination (less than 4 ft vertical in vent configuration): May reduce shutter setting by 1/16 in.

Propane (P) installations

- It is recommended that the air shutter on propane appliances remain at full open position.

Air Shutter Adjustment

Adjustment can be made to the air shutter with or without the logs installed with a ¼ in. nut driver. See Figure 1.

Figure 1. Air Shutter Location

To adjust air shutter:

- Loosen the screw on the burner assembly.
- To close the air shutter, turn shutter clockwise.
- To open air shutter, turn shutter counterclockwise.
- Tighten the screw.

NOTICE: *Flames should not appear orange or stretch to the top refractory. If sooting occurs, provide more air by opening the air shutter.*

Shutter Setting Verification / Flame Appearance

- After 15 minutes, the flames will be a yellow/blue mix. The front flames may be blue at this time.
- After 30 minutes, the flames should be yellow with some blue flames near the burner ports.
- After 1 hour, the flame will be at its maximum maturity.

Note: Visually, a propane flame may differ from a natural gas flame. This is due to the different chemical compositions that make up both fuel types. In general, the propane flames may be a little shorter and much brighter than a natural gas flame.

10 Finishing

A. Facing Material

- Metal front faces may be covered with non-combustible materials only.
- Facing and/or finishing materials must not interfere with air flow through louvers, operation of louvers or decorative fronts, or access for service.
- Facing and/or finishing materials must never overhang into the glass opening.
- Observe all clearances when applying combustible materials.

WARNING! Risk of Fire! DO NOT *apply combustible materials beyond the minimum clearances. Comply with all minimum clearances to combustibles as specified in this manual. Overlapping materials could ignite and will interfere with proper operation of decorative fronts and louvers.*

NOTICE: *Surface temperatures around the appliance will become warm while the appliance is in operation. Ensure finishing materials used for all surfaces (floor, walls, mantels, etc.) will withstand temperatures up to 190°F.*

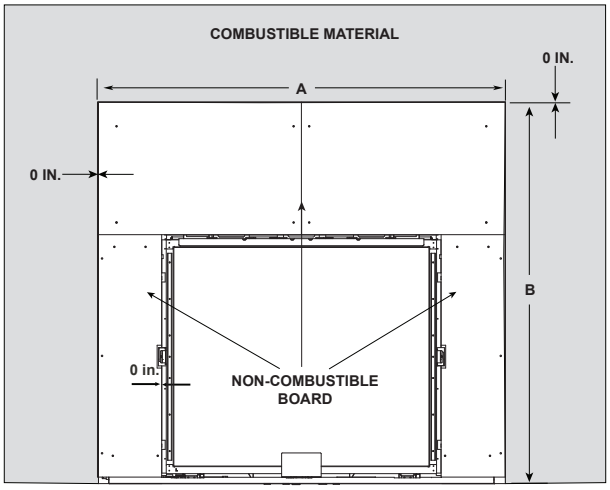

MODEL	A		B	
	in.	mm	in.	mm
TRUE-36-IFT	61	1549	57-5/8	1464
TRUE-42-IFT	67	1702	62-5/8	1591
TRUE-50-IFT	75	1905	66-5/8	1692

Figure 10.1 Non-combustible Facing Diagram

B. Finishing Templates

Two side finishing templates and one top finishing template are supplied with the appliance. Refer to the decorative front instructions for template removal.

INSIDE FIT Method: The finishing template pieces are required for installations that require more than one inch thick finishing materials to be installed over the face of the factory-supplied 1/2 inch non-combustible board. Refer to section 10.D for more information.

OVERLAP Method: The supplied templates are not required for finishing materials less than one inch thick. The required decorative front will overlap finish materials less than one inch thick. Refer to section 10.D for more information. Remove template by removing the two top screws and two screws on each side. The glass assembly will need to be removed to access the side screws. Follow the glass removal instructions in Section 11.

Arch Decorative Front Application: If an arch decorative front option is chosen, an Arch Template Kit is required to be installed prior to the installation of the decorative finishing materials. This kit includes new finishing templates (3) and arch corner fill pieces (2). Contact your dealer to order the correct Arch Template Kit for your fireplace model.

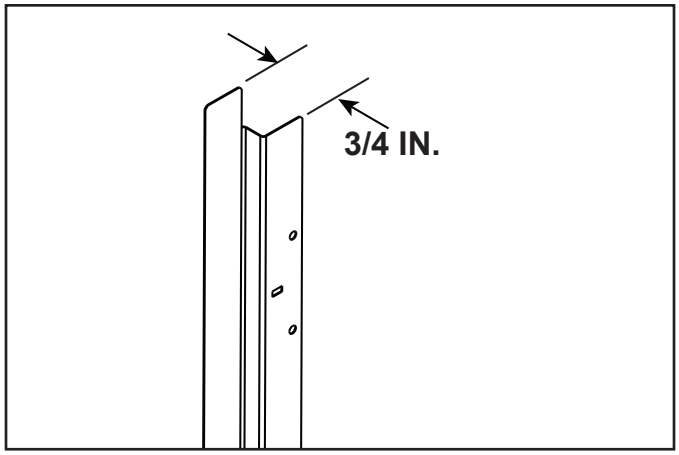

Figure 10.3 Left and Right Side Finishing Template Bends

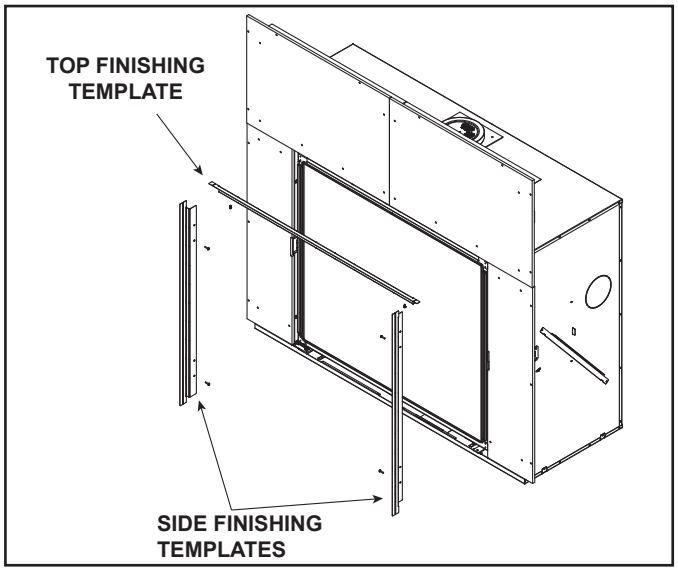

Figure 10.4 Top and Side Finishing Template Locations

Note: For Firesceen Fronts (denoted with “FS”), a thin layer of mortar may be applied over the visible non-combustible board between finishing material and the fireplace opening.

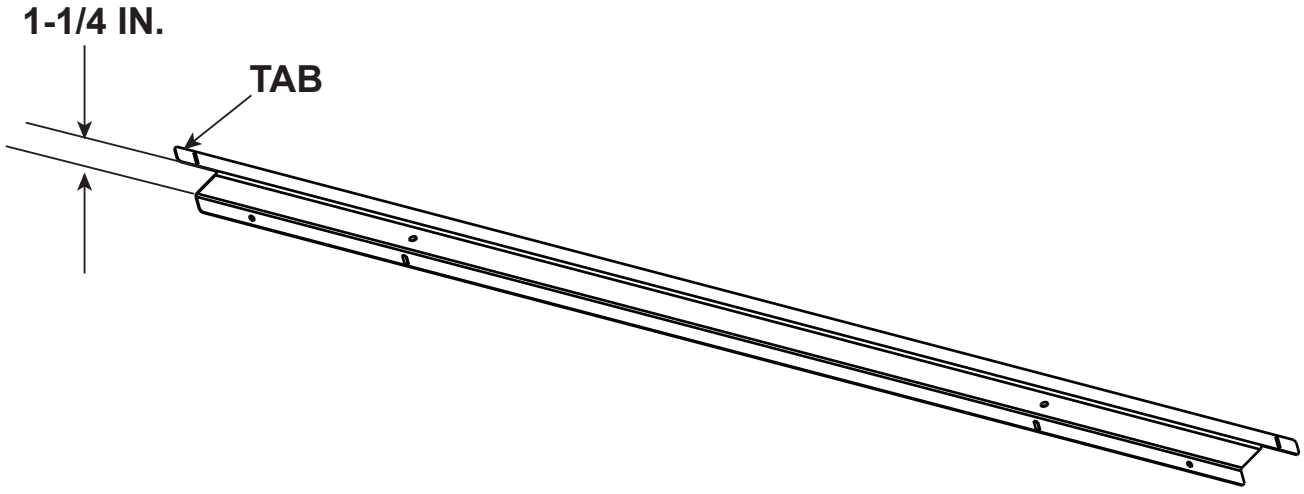

Figure 10.2 Top Finishing Template Bend

Figure 10.5 Finishing Template Bends

C. Mantel and Wall Projections

WARNING! Risk of Fire! *Comply with all minimum clearances as specified. Framing closer than the minimums listed must be constructed entirely of non-combustible materials (i.e., steel studs, concrete board, etc.).*

When installing a mantel, provisions must be made in order to secure the mantel to the adjacent framing materials. For example, lintel brackets or lag bolts may be considered for this purpose.

Combustible Mantel Legs or Wall Projections

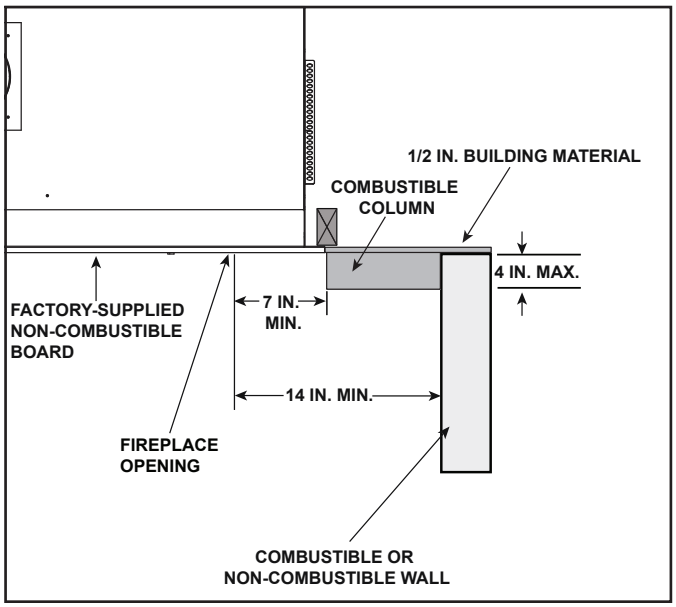

Figure 10.6 Combustible Mantel Leg and Wall Projections

Non-Combustible Mantel Legs or Wall Projections

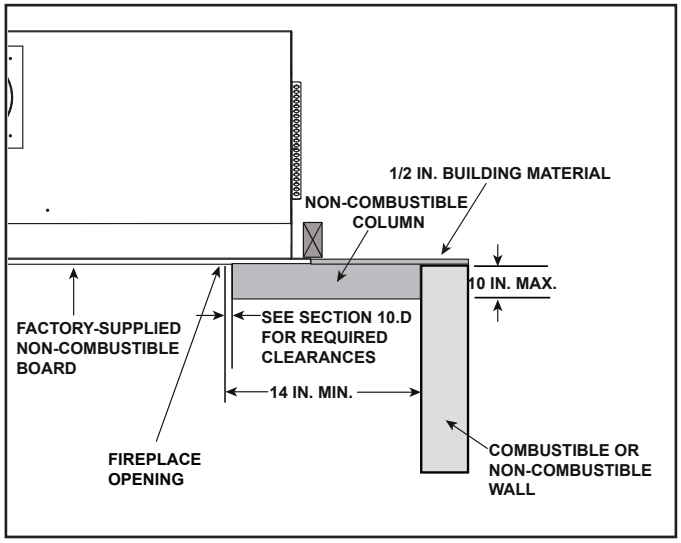

Figure 10.7 Non-Combustible Mantel Leg and Wall Projections

Non-Combustible Zone

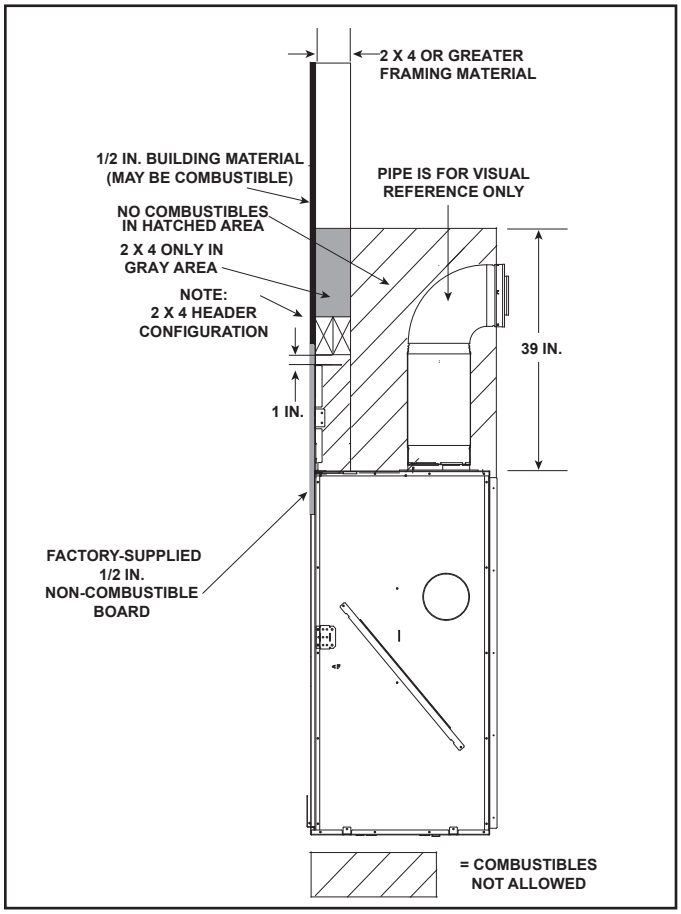

Figure 10.8 Non-Combustible Zone

Combustible Mantel Projections - TRUE-36

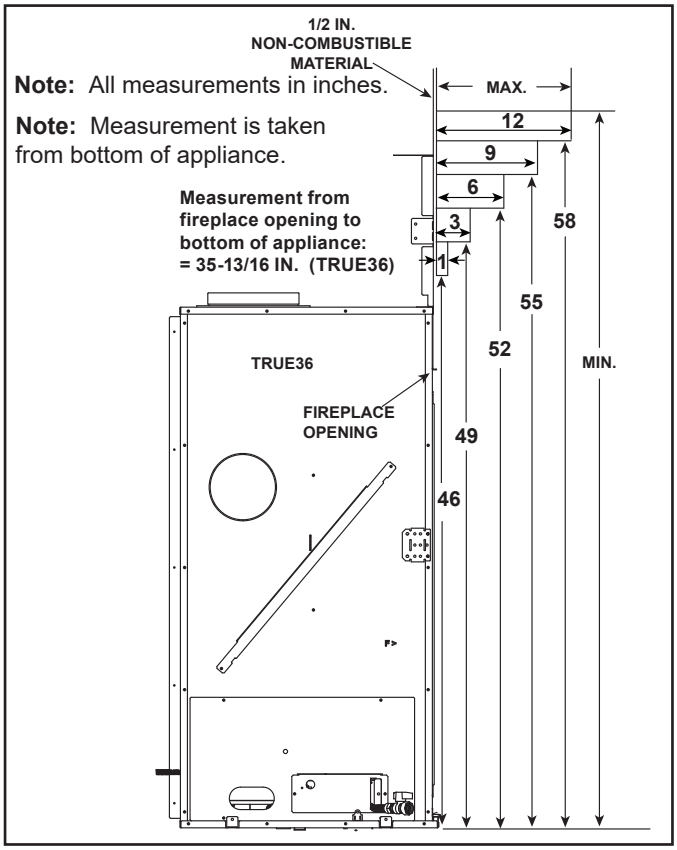

Figure 10.9 Combustible Mantel Allowance - TRUE-36

Combustible Mantel Projections - TRUE-42

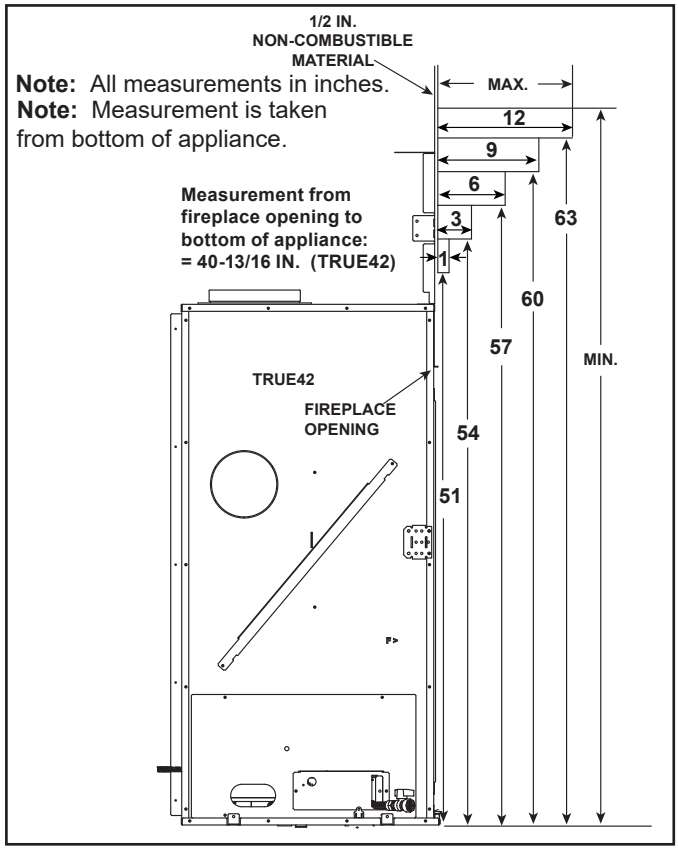

Figure 10.10 Combustible Mantel Allowance - TRUE-42

Combustible Mantel Projections - TRUE-50

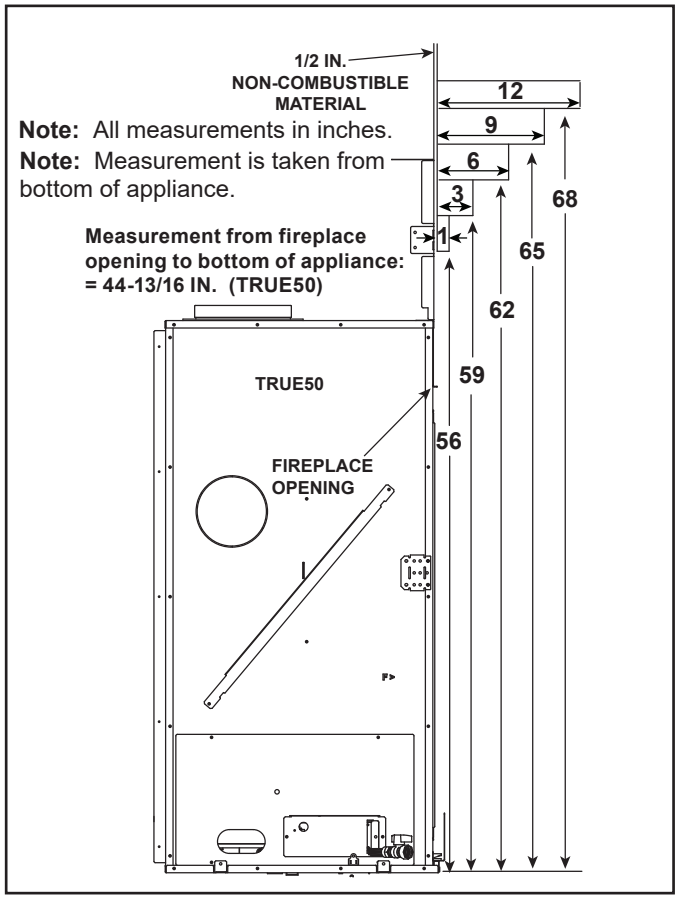

Figure 10.11 Combustible Mantel Allowance - TRUE-50

Non-Combustible Mantel Projections - TRUE-36

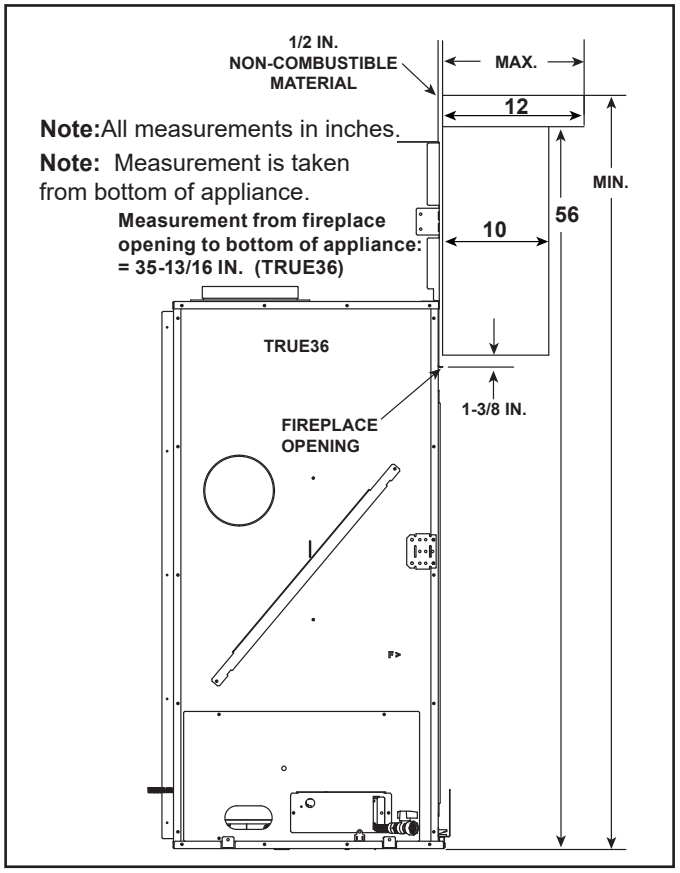

Figure 10.12 Non-Combustible Mantel Allowance - TRUE-36

Non-Combustible Mantel Projections - TRUE-42

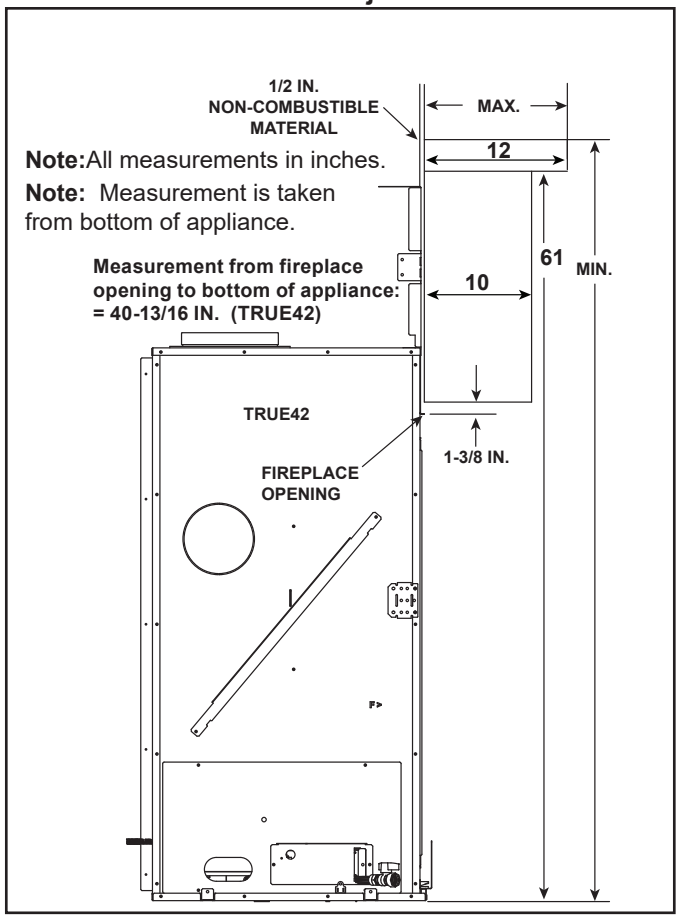

Figure 10.13 Non-Combustible Mantel Allowance - TRUE-42

Non-Combustible Mantel Projections - TRUE-50

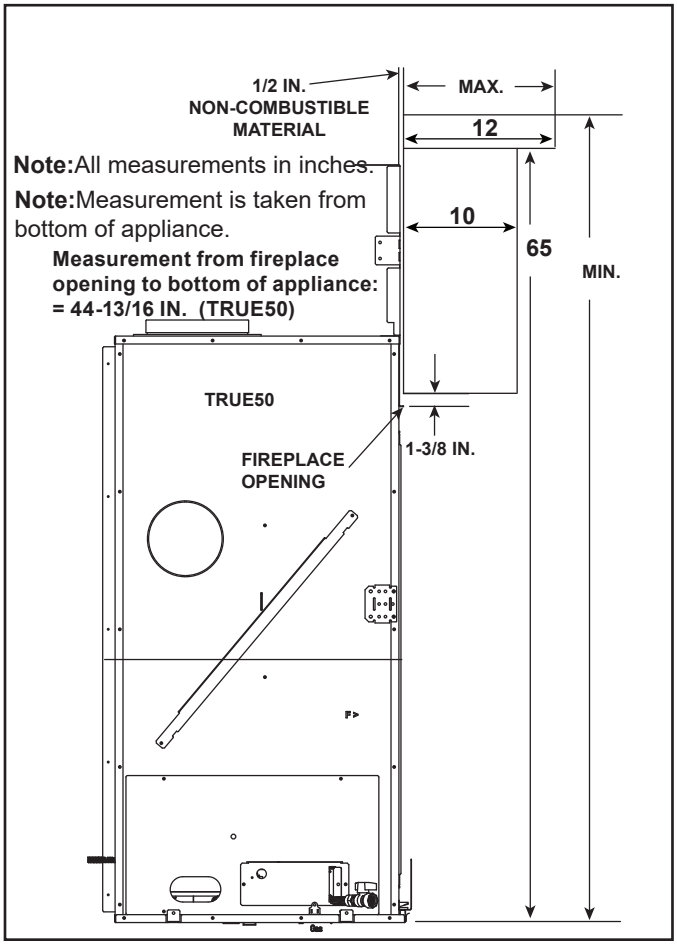

Figure 10.14 Non-Combustible Mantel Allowance - TRUE-50

D. Decorative Front Dimensions for Finishing

A decorative front is required for this appliance. Only decorative fronts certified for use with this appliance model may be used. Contact your dealer for a list of decorative fronts that may be used. Once you have determined what kind of decorative front and finishing material is going to be used on the fireplace, you may use the table below which shows the decorative front models and the finishing material thickness allowed. For an inside fit there is an available template to ensure that proper decorative front clearances are maintained with finishing material with thickness greater than 1 inch.

FIRESCREEN FRONTS	
RECTANGULAR	ARCHED*
FS-36IFT	FS-36AIFT*
FS-42IFT	FS-42AIFT*
FS-50IFT	FS-50AIFT*
FORGE-36IFT	FORGE-36AIFT*
FORGE-42IFT	FORGE-42AIFT*
FORGE-50IFT	FORGE-50AIFT*
*Requires Arch Template Kit (not included)	

Table 10.1. Approved Decorative Fronts

The decorative fronts approved for use with this appliance have been designed to be installed by two methods: Overlap Fit or Inside Fit. Before beginning the installation, it is important to determine with method will be used.

Overlap Fit Method: These decorative fronts have been designed to be installed over finishing material up to one inch thick.

Inside Fit Method: These decorative fronts may be recessed into non-combustible finishing material up to 10 inches thick.

NOTICE: Proper clearances from the fireplace opening to any finishing material thicker than 1 inch MUST be maintained.

NOTE: Finishing templates are included with this product. See Section 10.B.

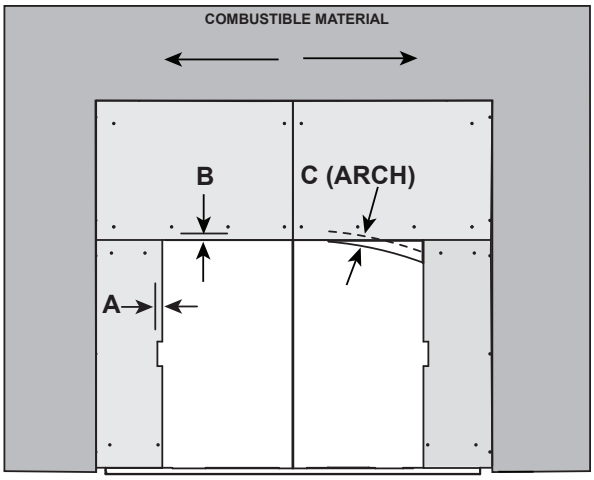

DIMENSIONS	
A	3/4 IN.
B	1-3/8 IN.
C	1-3/8 IN.

Figure 10.15 Inside Fit Decorative Fronts

11 Appliance Setup

A. Fixed Glass Assembly

WARNING! Risk of Asphyxiation! *Handle fixed glass assembly with care. Inspect the gasket to ensure it is undamaged and inspect the glass for cracks, chips or scratches.*

- ***DO NOT** strike, slam or scratch glass.*
- ***DO NOT** operate fireplace with glass removed, cracked, broken or scratched.*
- *Replace as a complete assembly.*

CAUTION! Risk of Injury! *Glass assembly installation and removal must be performed by a qualified service technician. See chart below for glass assembly weights.*

- ***TRUE-42 AND TRUE-50 MODELS: It is recommended that Glass installation and removal be performed by two qualified service technicians.***

Glass Weights		
TRUE-36	**TRUE-42**	**TRUE-50**
32 lbs	**41 lbs**	**54 lbs**

CAUTION! Risk of Cuts or Abrasions. *Wear protective gloves and safety glasses during installation. Sheet metal edges are sharp.*

Removing Fixed Glass Assembly

This fixed glass assembly is held in place by lower glass clips, side clips and top retaining rail. To remove clips, engage the spring clips with the tool and pull tool out slightly.

1. The glass clip removal/installation tool is fastened to the lower right corner of the appliance. Remove tool by removing one screw. See Figure 11.1. If glass clip removal tool becomes misplaced, a cotter pin removal tool may be used.

NOTICE: *Protect and prevent the hearth from damage by covering it with a drop cloth.*

Figure 11.1. Glass Clip Tool

Figure 11.2. Glass Clip Tool Location

2. To disengage bottom glass clips, position the glass clip removal/installation tool parallel to the floor and insert it about two inches into the gap between the glass frame and the front bottom fireplace lip. Insert the tool on the lower left side of the glass clip and move to the right to engage the clip. Using one motion, pull out slightly while pushing down to disengage bottom glass clip. Repeat for the other bottom spring clips. There are three on the TRUE-36 and four on the TRUE-42 and TRUE-50. See Figure 11.2 and Figure 11.3.

Figure 11.3. Inserting Glass Clip Tool

3. Disengage the left and right glass clips one at a time using the glass clip removal/installation tool. Insert tool from the top side of the side glass clip. Pull the glass tool out slightly to disengage the side clip. See Figure 11.7.
4. Grasp the left and right sides of the glass assembly and carefully pull outward to remove the bottom from the support tabs on the bottom glass clips. Lower the glass to remove it from the top retainer rail.

***CAUTION! Risk of Injury! DO NOT** put fingers under glass frame. Fingers may get pinched by glass frame during removal.*

Replacing Fixed Glass Assembly

This fixed glass assembly is held in place by two side clips, one top retaining rail and lower glass clips. The TRUE36 has three lower glass clips and the TRUE42 and TRUE50 have four lower glass clips. To remove clips, engage the spring clips with the tool and pull tool out slightly. Rotate wrist left and right to disengage clip. The glass clip tool is shown in Figure 11.1.

1. Tool is fastened to the lower right corner of the fireplace. Remove tool by removing one screw. If glass clip removal tool becomes misplaced, a cotter pin removal tool may be used.
2. Position the fixed glass assembly so that it is about eight inches from the face of the appliance. See Figure 11.4. An arch decorative front application will require the glass to be installed at a steeper angle.

Figure 11.4 Positioning Glass

3. Center the fixed glass assembly from left to right inside the top of the appliance opening.

   The glass frame has tabs on the bottom that coincide with the bottom glass clip location. The TRUE-36 has three tabs and the TRUE-42 and TRUE-50 have four tabs. If the glass is not centered, it cannot be installed properly. Align the notch at the top center of the glass frame assembly with the notch on the top retaining rail. See Figure 11.5.

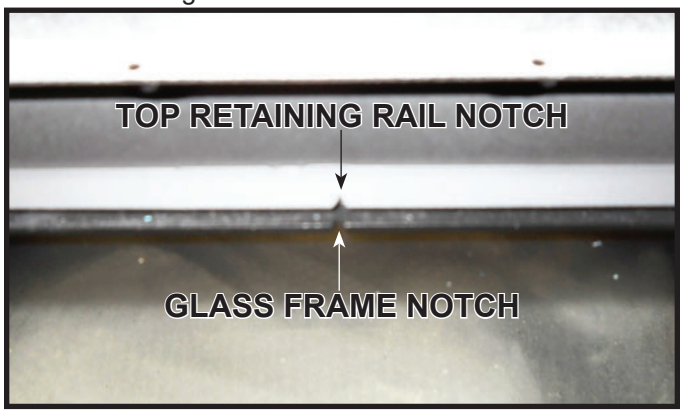

Figure 11.5 Align Notches

4. Install fixed glass assembly by lifting it up and sliding it into the top retaining rail. Grasp the fixed glass assembly on the sides.

***CAUTION! Risk of Injury! DO NOT** put fingers under glass frame. Fingers may get pinched by glass frame during installation.*

   Once the glass is installed tightly into the top retainer rail, push in the bottom so that the glass assembly rests on the support tabs on the glass clip. See Figure 11.6.

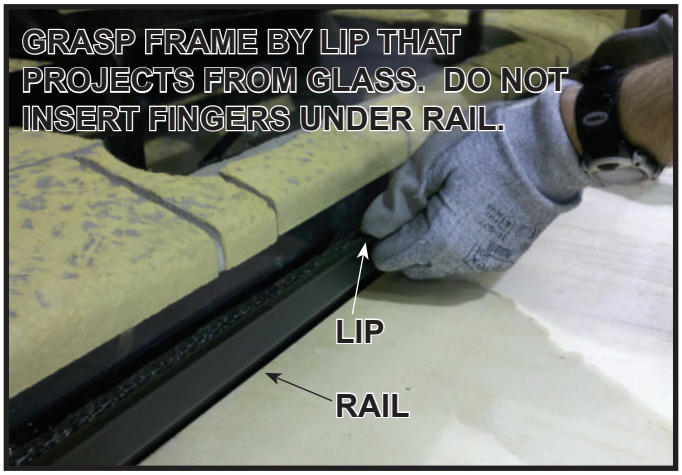

Figure 11.6. Installing Glass

5. Ensure the fixed glass assembly is situated tight against the firebox face. Engage the left and right glass clips using the glass clip tool. See Figure 11.7.

Figure 11.7. Securing Side Glass Clips

6. Once the left and right glass clips are installed, engage the bottom clips by inserting the glass clip tool at a sharp downward angle to get between the gap between the glass frame and the front bottom fireplace lip. See Figure 11.8.
7. Return glass tool to its shipping location in the lower right corner of the appliance and secure with one screw.

Figure 11.8. Securing Bottom Glass Clips

B. Remove the Shipping Materials

Remove shipping materials from inside or underneath the firebox.

- The splatter guard is a piece of corrugated material used to protect the appliance during the installation process before finishing work on the whole hearth is complete. Splatter guards may be factory installed or accompany the decorative front of the unit, depending on the fireplace model. Splatter guards must be removed before appliance is fired.

WARNING! Risk of Fire! *Close the ball valve before installing the splatter guard to prevent accidental lighting. Remove the splatter guard before lighting the appliance.*

C. Clean the Appliance

Clean/vacuum any sawdust that may have accumulated inside the firebox or underneath in the control cavity.

D. Install Glass Refractory (TRUE-36G-IFT/ TRUE-42G-IFT Only)

CAUTION! Risk of Cuts or Abrasions. *Wear protective gloves and safety glasses during installation.*

NOTICE: *Handle refractory panels with care. Refractory may chip or crack if dropped or impacted.*

TOOLS

Screw gun equipped with 1/4 in. socket or

1/4 IN. wrench or socket

Utility Knife

Flat Screwdriver

REFRACTORY COMPONENTS

(1) Black Glass Left Panel

(1) Black Glass Right Panel

(1) Black Glass Rear Panel

(2) Finish Trim Pieces

(1) Top Refractory Panel

INSTALLATION

1. Remove glass from the front of the appliance. Remove all shipping materials from inside the firebox. See Figure 11.9.

Figure 11.9 Remove Shipping Materials

2. Carefully remove top refractory by straightening the retaining tabs. Set refractory panel aside for later use. See Figure 11.9.
3. Separate the shipping bracket from the log grate by cutting the zip tie with a utility knife. See Figure 11.10

Figure 11.10 Separate Shipping Bracket from Log Grate

4. Bend shipping bracket up slightly, exposing the two screws that retain the shipping bracket to the log grate. Remove the screws and discard shipping bracket. See Figure 11.11.

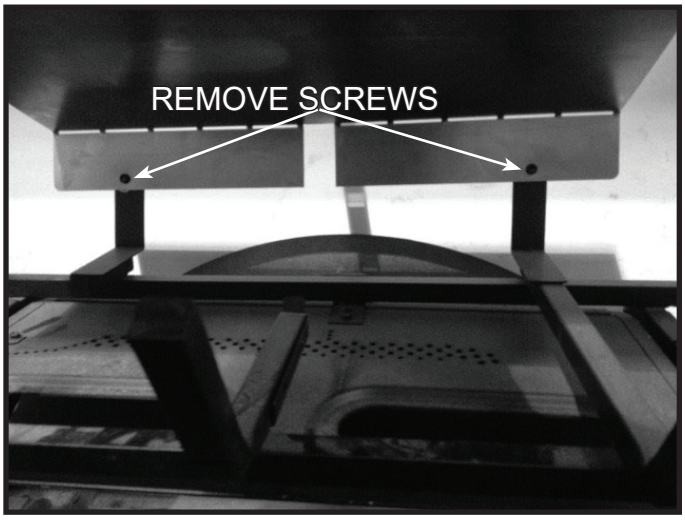

Figure 11.11 Remove Shipping Bracket

5. Slide the two left base refractory pieces and one right base refractory piece forward or remove completely. See Figure 11.10.
6. Using a flat screwdriver, straighten hand bends on the refractory tabs at the top of the side spacers (left and right) to allow the side spacers to be moved forward about three inches. See Figure 11.12.

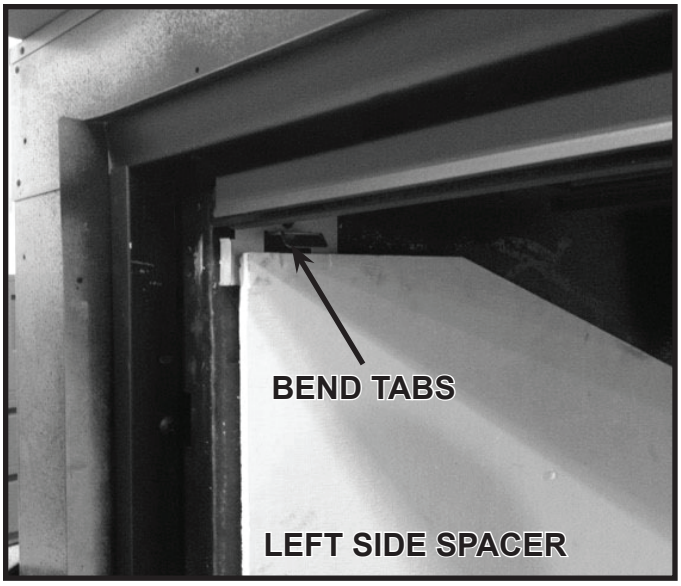

Figure 11.12 Left Refractory Tab

7. Place back glass panel with arched portion down into the rear of the appliance. See Figure 11.13. Slide the white side spacers toward the rear of the appliance until they contact the rear glass panel.

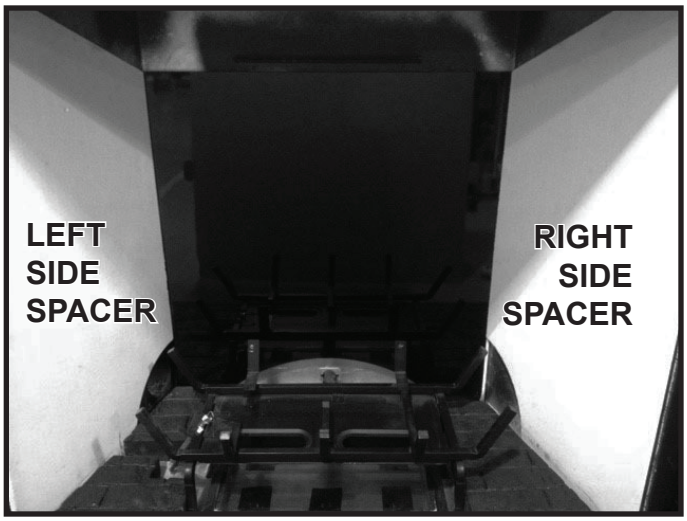

Figure 11.13 Installed Black Glass Rear Panel

8. Slide left glass panel into the appliance until it contacts the rear glass panel. Ensure the notch is on the bottom side. Bend the refractory tabs over to retain the glass. See Figure 11.14.
9. Slide right glass panel into appliance until it contacts the rear glass panel. Bend the refractory tabs over to retain the right glass panel. See Figure 11.15.
10. Place tabs of the finish trim behind the white side spacer and refractory tab. Push the finish trim into place until it is flush with the outside of the firebox. See Figures 11.16 and 11.17. Repeat for opposite side.

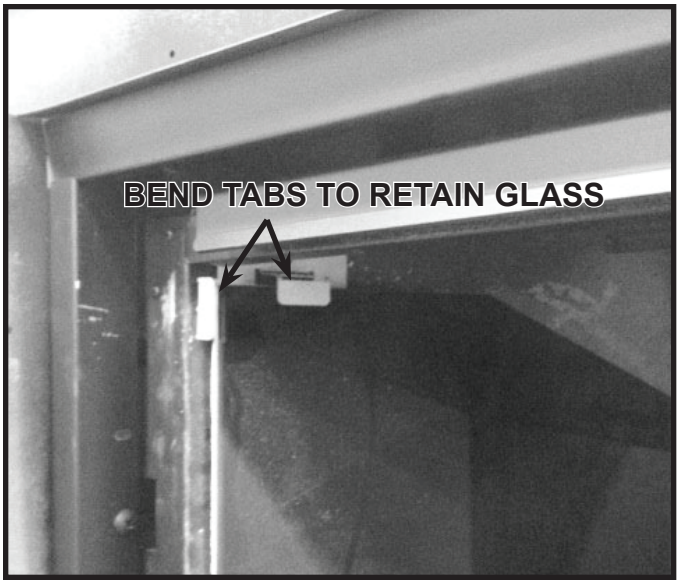

Figure 11.14 Left Refractory Tab

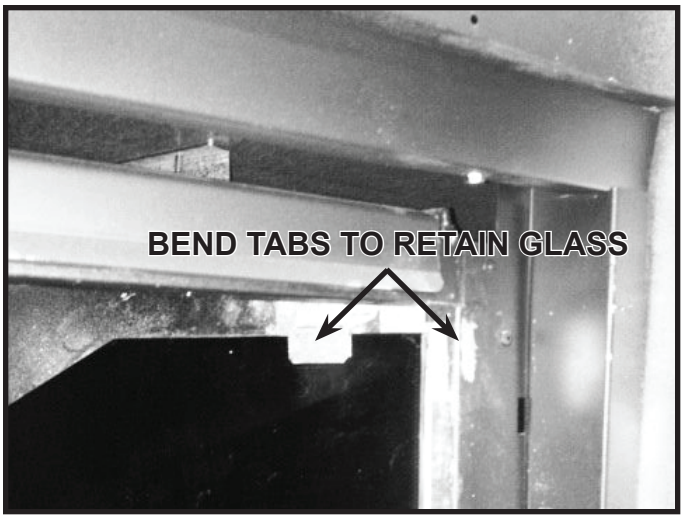

Figure 11.15 Right Refractory Tab

Figure 11.16 Upper Right Finish Trim

Figure 11.17 Lower Right Finish Trim

11. Carefully reinstall base refractory, removed in step 5, back into position. Refer to Figure 11.9 for correct placement.
12. Carefully remove top refractory from packaging and place into appliance with taper toward the rear. Lift refractory up so the sides of the top refractory rest on the left and right side glass and spacers. Apply firm pressure to top refractory leading edge to ensure that the refractory is fully seated against the back wall of the appliance. See Figure 11.18.

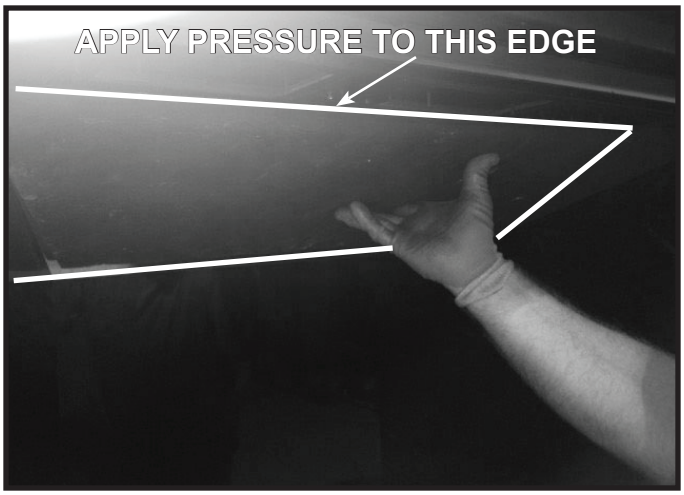

Figure 11.18 Top Refractory Placement

E. Install Teco-Sil and Mystic Embers

1. Install Teco-Sil along front edge of glass as shown in Figure 11.19. Rock should follow contour cutout in the front refractory.

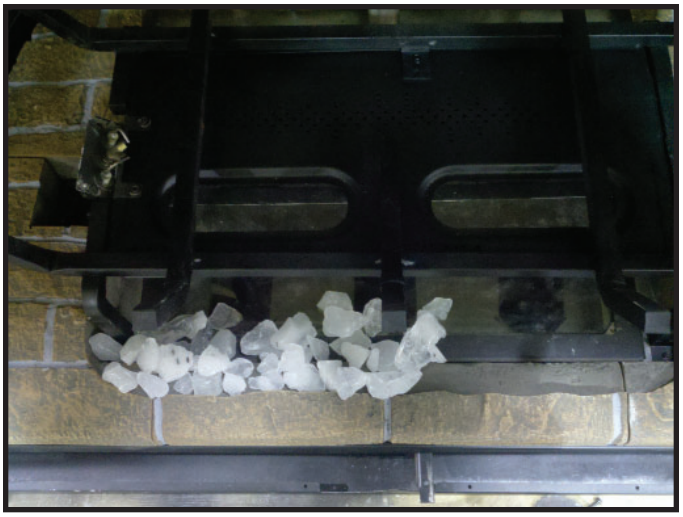

Figure 11.19. Install Teco-Sil

2. Fill in the rest of the ember glass area by placing an even layer of Teco-Sil across the bottom. Dropping the Teco-Sil through the oval holes in the burner creates a more even layer. See Figure 11.20.

3. Using a high temperature black paint, fog the Teco-Sil to the desired look. See Figure 11.21. Prior to painting, take precautions to prevent any overspray from reaching the pilot assembly.

NOTICE: *Do NOT paint the pilot assembly!*

Figure 11.20. Ember Glass Area Covered with Teco-Sil

Figure 11.21. Teco-Sil Painted

4. Apply Mystic Embers around the ember bed and hearth refractory. The joints in the front middle hearth refractory can be concealed with these embers.

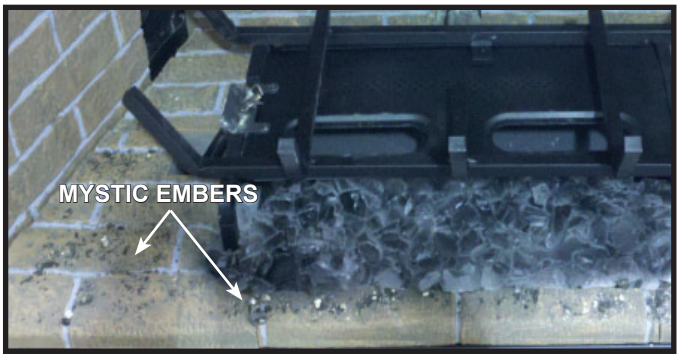

Figure 11.22. Apply Mystic Embers

F. Glowing Ember Placement

WARNING! Risk of Explosion! *Follow ember placement instructions in manual. DO NOT place embers directly over burner ports. Replace ember material annually. Improperly placed embers interfere with proper burner operation.*

Ember material is shipped with this gas appliance. To place the ember material:

- Embers CANNOT be placed directly over ports. Care should be taken not to cover the lighting trail of ports (from back to front).
- Place dime-size pieces of Glowing Embers® just in front of the port trail, but not on or in between the ports (see Figure 11.23). Care should be taken so that the ports are not covered. Failure to follow this procedure will likely cause lighting and sooting problems.
- Save the remaining ember materials for use during appliance servicing. The embers provided should be enough for 3 to 5 applications.

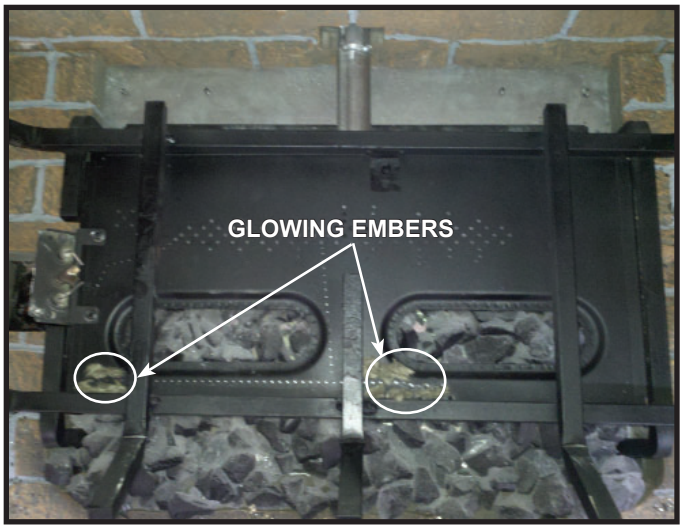

Figure 11.23. Location of Glowing Embers

G. LED's

LED's are factory installed. No additional set up or activation required.

- See Owner's Manual for maintenance and bulb replacement.

H. Install the Log Assembly

LOG PLACEMENT INSTRUCTIONS

Log Set Assembly: LOGS-TRUE36
LOGS-TRUE42

Models: TRUE-36C, TRUE-36H, TRUE-36S, TRUE-36G-IFT, TRUE-36H-IFT, TRUE-36S-IFT, TRUE-36TG-IFT

TRUE-42C, TRUE-42H, TRUE-42S, TRUE-42G-IFT, TRUE-42H-IFT, TRUE-42S-IFT, TRUE-42TG-IFT

Note: Refractory appearance and material will vary depending on fireplace model.

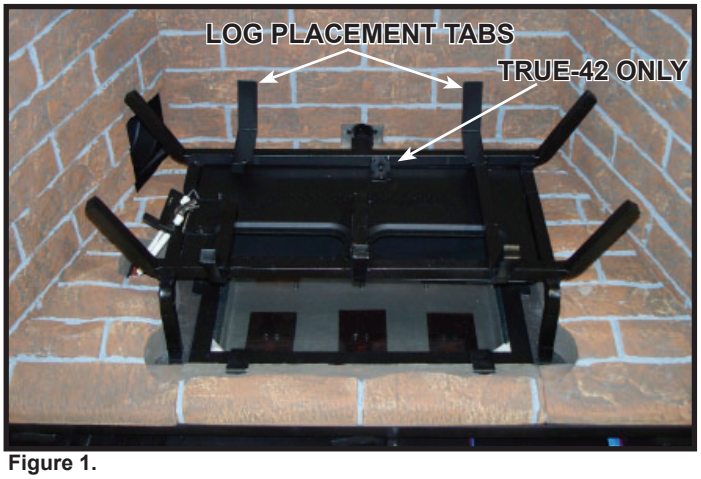

Figure 1.

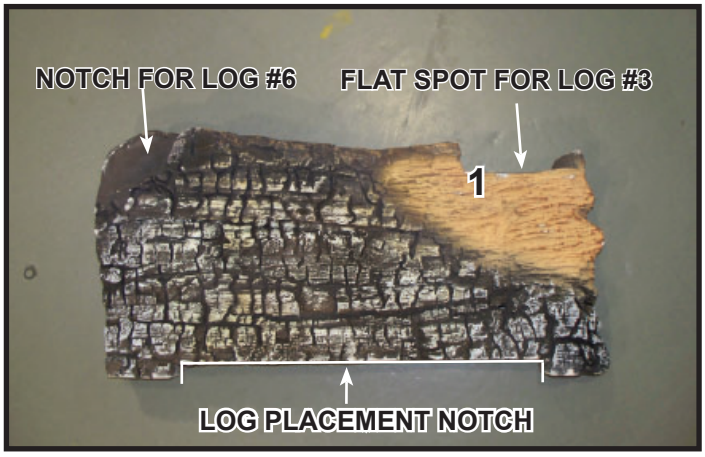

Figure 2.

CAUTION: *Logs are fragile, handle with care.*

NOTICE: *If small chips and/or scratches are present, repair them using the included paint touch-up kit.*

Log #1 (SRV2280-701 for TRUE-36, SRV2281-701 FOR TRUE-42): Locate log placement notch on the bottom of log #1. See Figure 2. Mate outer notches on the bottom of Log #1 with the left and right grate tines. Slide Log #1 toward the rear of appliance until back side of Log #1 contacts the log placement tabs. See Figures 1-3.

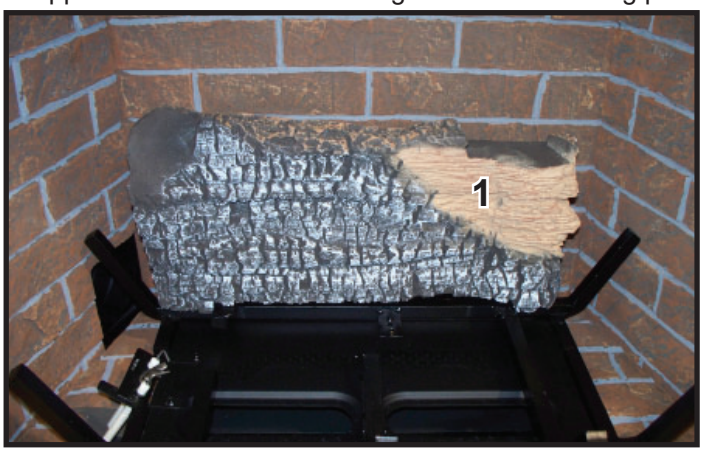

Figure 3.

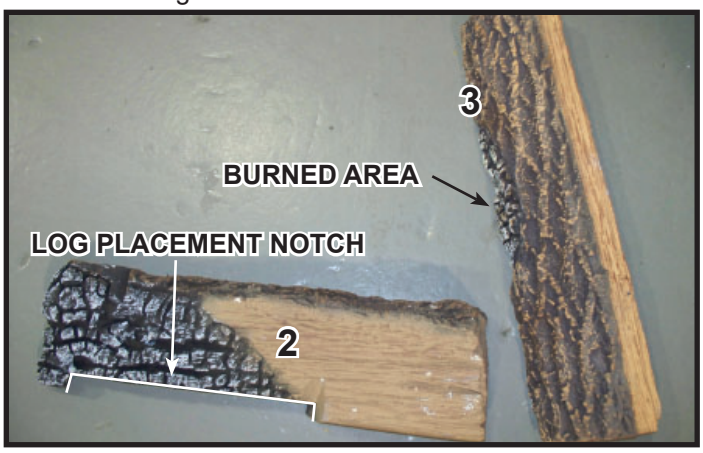

Figure 4.

Log #2 (SRV2280-702 for TRUE-36, SRV2281-702 for TRUE-42): Locate log placement notch on the bottom of Log #2. See Figure 4. Mate notch on the bottom of Log #2 with the center and right grate tines. Slide log toward rear of appliance until right end contacts the side grate tine. See Figure 5.

Log #2 (TRUE-36): Log #2 will be about 1 inch from the back of the center grate tine when properly placed. See Figure 5.

Log #2 (TRUE-42): Log #2 will contact center log placement tab on center grate tine. See Figure 5.

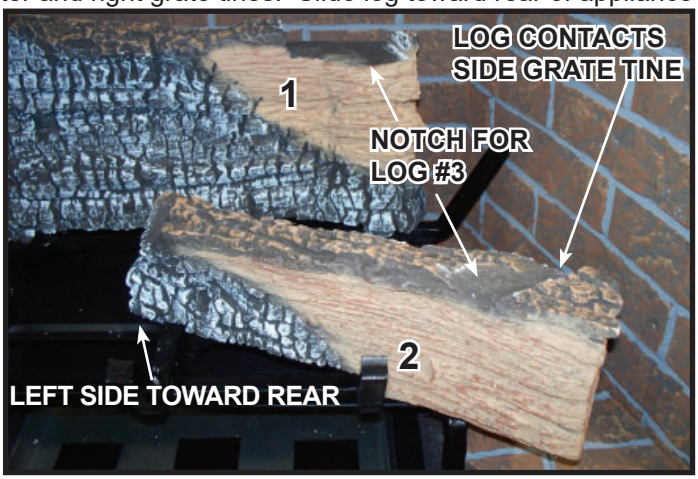

Figure 5.

Figure 6.

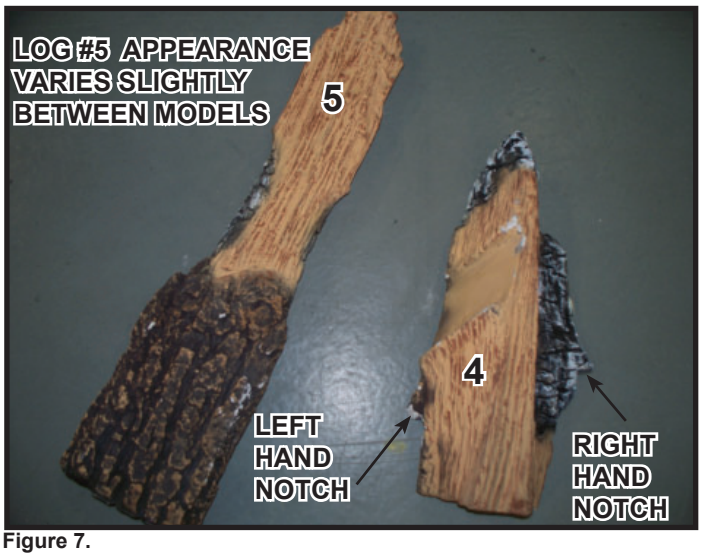

Figure 7.

Log #3 (SRV2281-703): Locate log placement notches for Log #3. See Figure 5. Place Log #3 onto notches so that the bottom of the log rests in the notch on log #2 and the top rests in the left hand side of the notch on Log #1. The top of the burned area on Log #3 will be close to Log #1 when properly positioned. See Figure 6.

Log #4 (SRV2280-704 for TRUE-36; SRV2281-704 for TRUE-42): See Figure 7. Place Log #4 between the left and center grate tines. Notches on log will rest on tines. Log should be positioned as far forward as possible. See Figure 8. Log #4 will lean against Log #2.

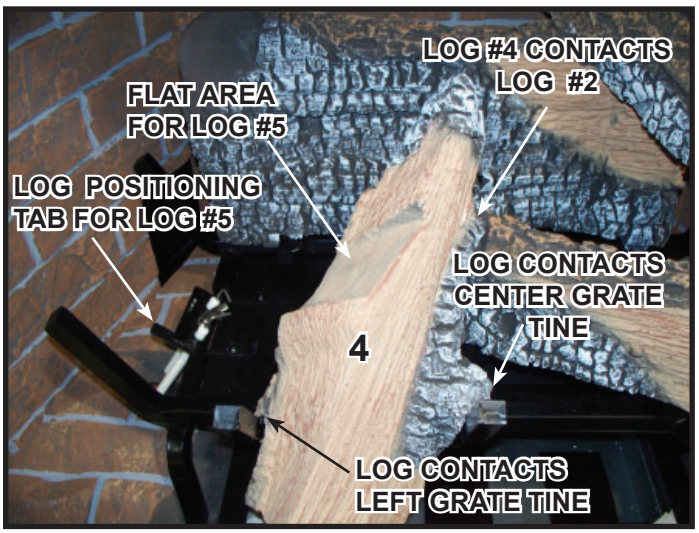

Figure 8.

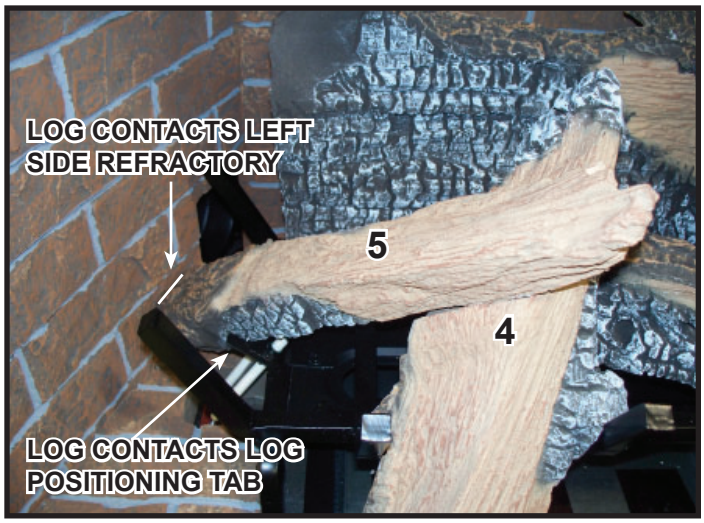

Figure 9. Log #5 - TRUE-36.

Log #5 (SRV2280-705 FOR TRUE-36, SRV2281-705 FOR TRUE-42): Locate flat area on Log #4 that will be used to position Log #5. See Figure 8. Place Log #5 into appliance as shown in Figure 9 or Figure 10. Left end of log should rest against left side refractory just in front of air inlet on rear, lower left of appliance.

Log #5 (TRUE-36): Log #5 will sit about halfway between front and rear grate tines, partially over pilot assembly. Log #5 will contact log positioning tab as shown in Figure 9. Right side of Log #5 will rest in notch on Log #4. See Figure 9.

Log #5 (TRUE-42): Log #5 will rest against the rear grate tine as shown in Figure 10. Right side of Log #5 will rest in notch on Log #4. See Figure 10.

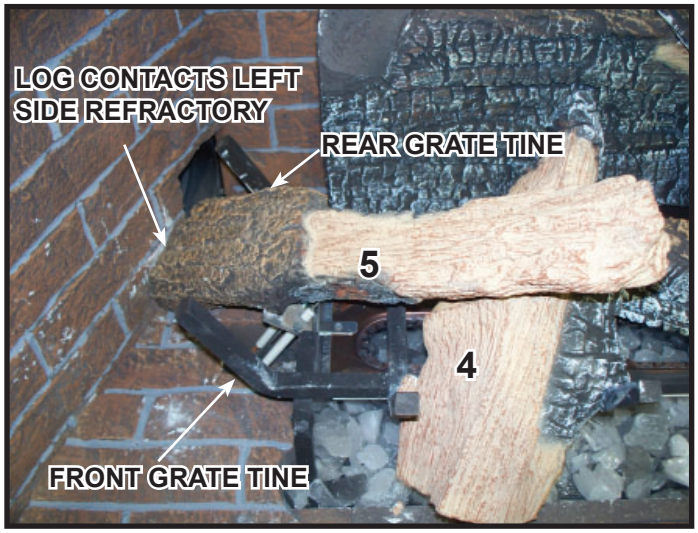

Figure 10. Log #5 - TRUE-42

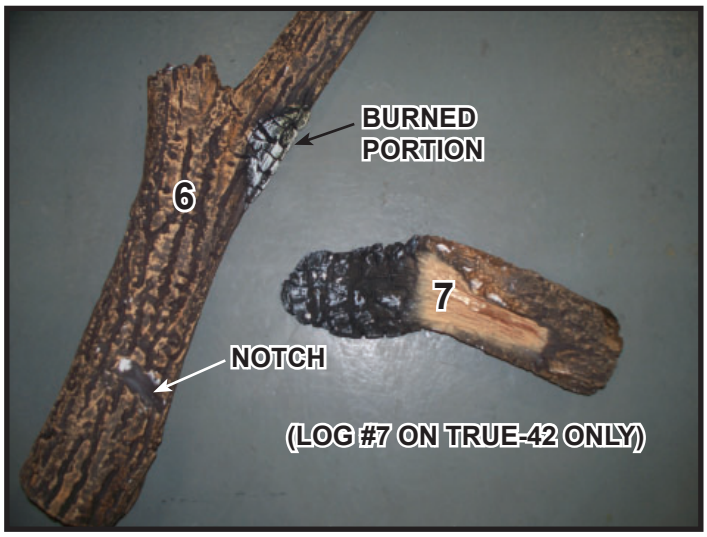

Figure 11.

Figure 12.

Log #6 (SRV2281-706): Place Log #6 into appliance as shown in Figure 12. Base of log will sit on bottom refractory and notch on log will rest against grate tine. Lean top of log into notch on Log #1. See Figure 2.

Figure 13.

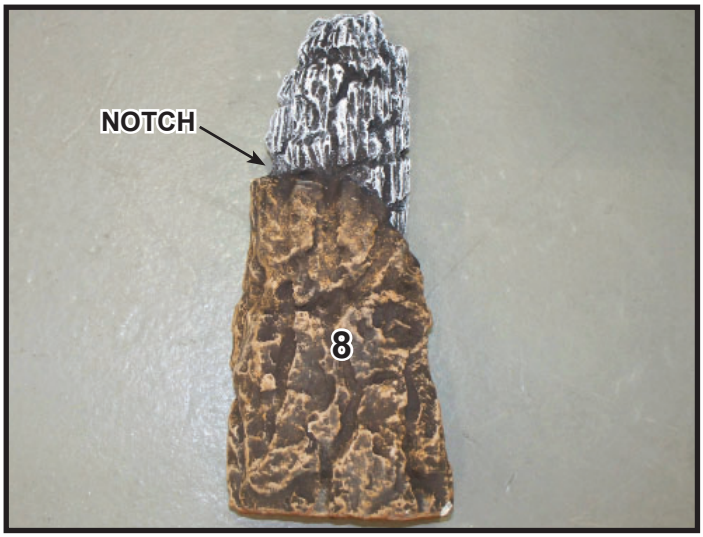

Figure 14.

Log #7 (SRV2281-707 TRUE-42 ONLY): Place Log #7 into appliance as shown in Figure 13. Right side of log should contact right refractory and burned portion of log should be centered between front and back tines.

Log #8 (SRV2281-708): Place Log #8 into appliance as shown in Figure 15. Left notch will contact left grate tine and base of log will rest on bottom refractory.

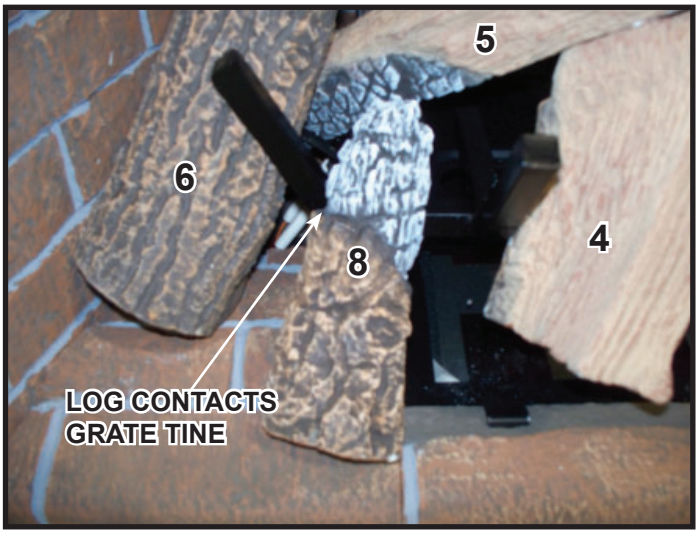

Figure 15.

Figure 16. Log Set Installed.

Log Set Assembly: LOGS-TRUE50
Models: TRUE-50C, TRUE-50H, TRUE-50S TRUE-50H-IFT, TRUE-50S-IFT, TRUE-50TG-IFT

LOG PLACEMENT INSTRUCTIONS

Figure 1.

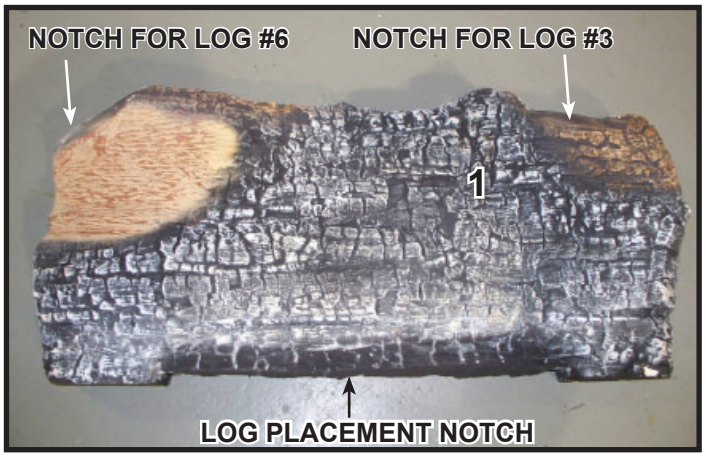

Figure 2.

CAUTION: *Logs are fragile, handle with care.*
NOTICE: *If small chips and/or scratches are present, repair them using the included paint touch-up kit.*

Log #1 (SRV2282-701): Locate log placement notch on the bottom of log #1. See Figure 2. Mate outer notches on the bottom of Log #1 with the left and right grate tines. Slide Log #1 toward the rear of appliance until back side of Log #1 contacts the log placement tabs shown in Figure 1. See Figure 3.

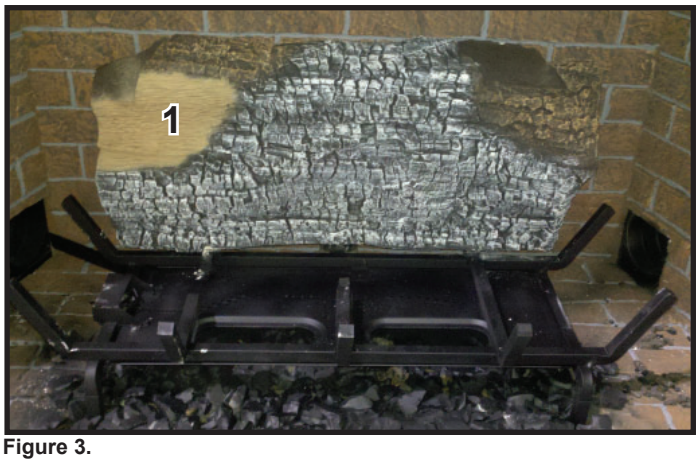

Figure 3.

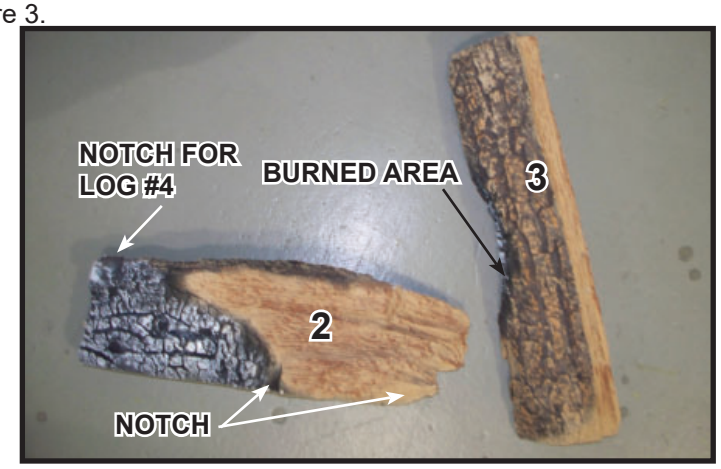

Figure 4.

Log #2 (SRV2282-702): Locate log placement notches on the bottom of Log #2. See Figure 4. Mate notches on the bottom of Log #2 as shown in Figure 5. Notch on front of log will contact right front grate tine and notch on right side of log will contact front inside corner of side grate tine.

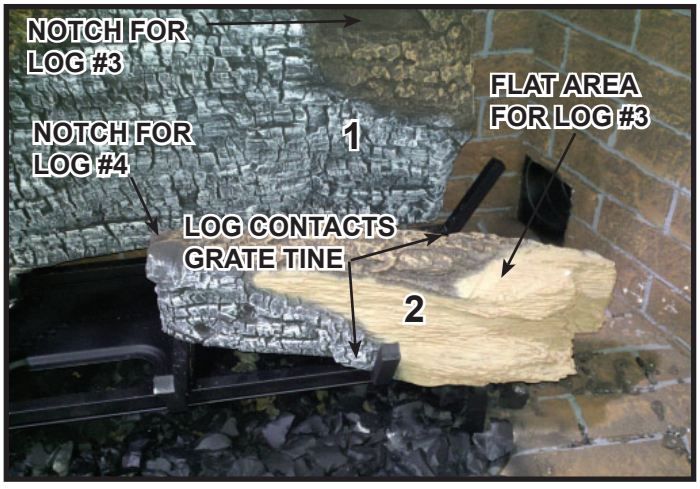

Figure 5.

Figure 6.

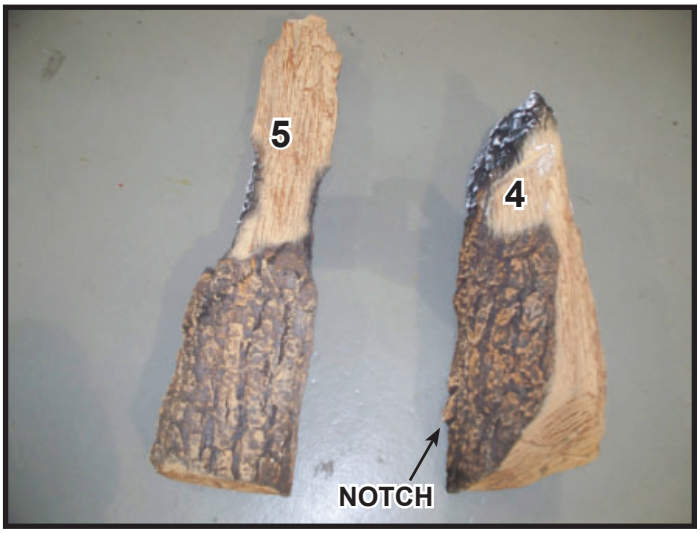

Figure 7.

Log #3 (SRV2282-703): Locate log placement areas for Log #3. See Figure 5. Place Log #3 into notch on Log #1 so that the base rests on the flat area of log #2. The top of the burned area on Log #3 will be close to Log #1 when properly positioned. See Figure 6.

Log #4 (SRV2282-704): See Figure 7. Place Log #4 between the left and center grate tines. The base of Log #4 should rest on the refractory. Notch on log will rest on the front left grate tine and the top of log will rest in notch on Log #2. See Figure 8.

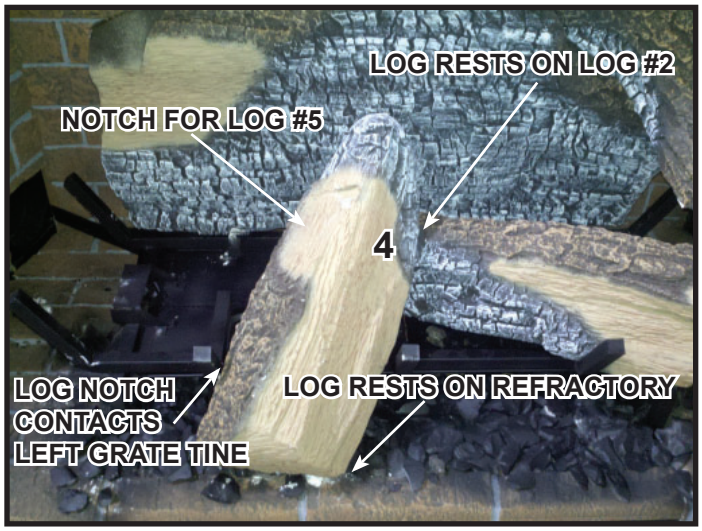

Figure 8.

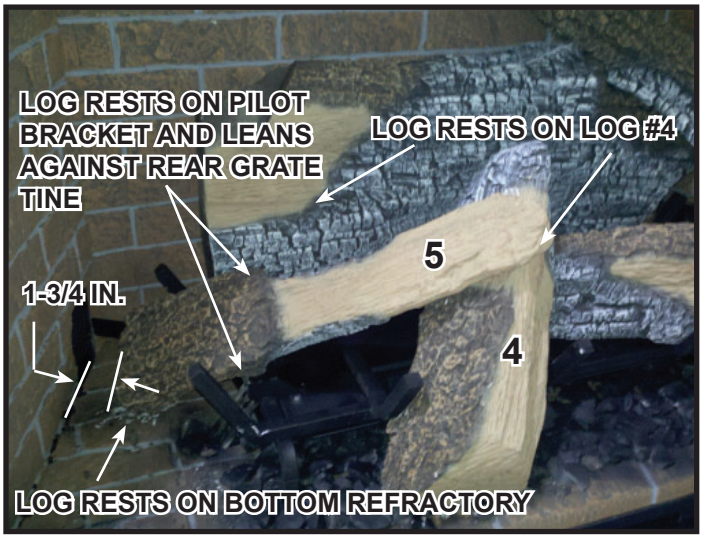

Figure 9.

Log #5 (SRV2281-705): Locate flat area on Log #4 that will be used to position Log #5. See Figure 8. Place Log #5 into appliance as shown in Figure 9. The left side of the log will rest on bottom refractory and pilot bracket. It will also lean against rear grate tine. The right side of Log #5 will rest in notch on Log #4. There will be a space approximately 1-3/4 inches from the end of the log to the left side refractory.

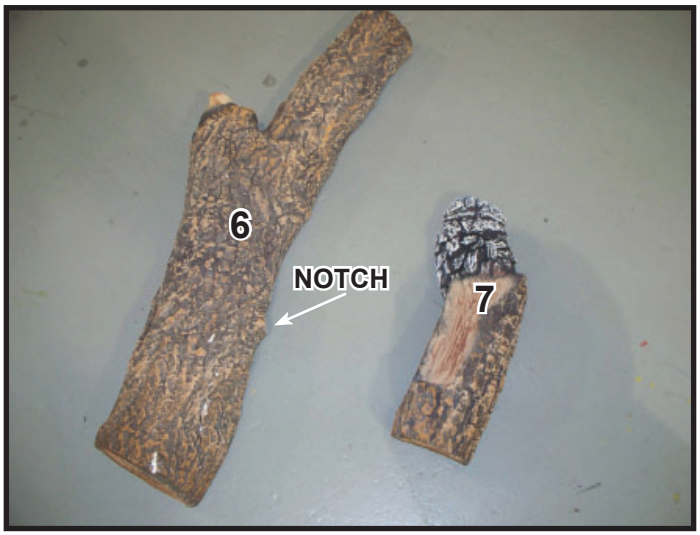

Figure 10.

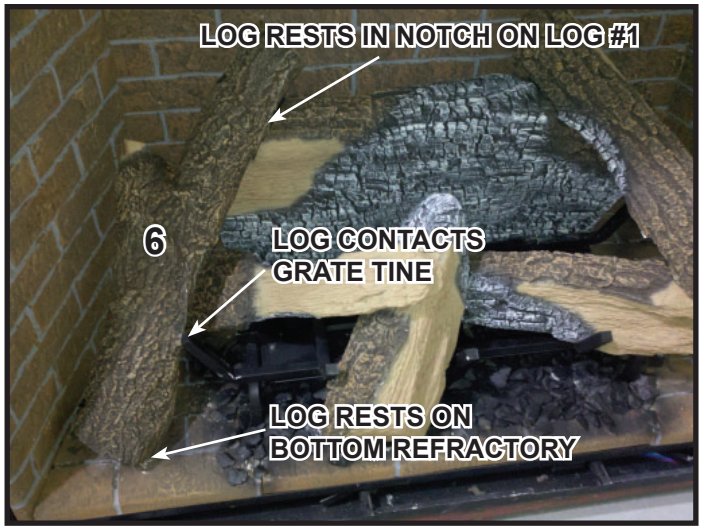

Figure 11.

Log #6 (SRV2282-706): Place Log #6 into appliance as shown in Figure 11. Base of log will sit on bottom refractory and notch on log will rest against grate tine. Lean top of log into notch on Log #1. See Figure #2.

Figure 12.

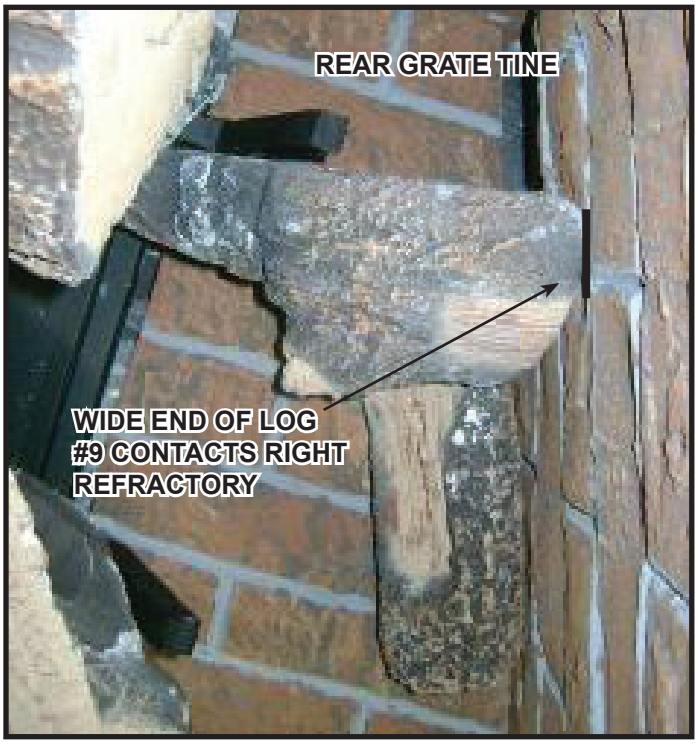

Figure 13.

Log #7 (SRV2281-707): Place Log #7 into appliance as shown in Figure 12. The unburned end of the log should rest on the second grout line from the front edge. The burned end of the log should rest on the sixth grout line. The right side of the log should contact the refractory on the right side of the firebox.

Log #9 (SRV2170-725): Place Log #9 into appliance as shown in Figure 13. Place log so that the wide end rests on Log #7 and contacts the refractory on the right side of the firebox just in front of the air intake port. The narrow end of Log #9 should contact the rear of Log #1 and the middle of Log #9 should contact the rear-right vertical grate tine.

Log #8 (SRV2281-708): Place Log #8 into appliance as shown in Figure 14. Left notch will contact left grate tine and base of log will rest on bottom refractory.

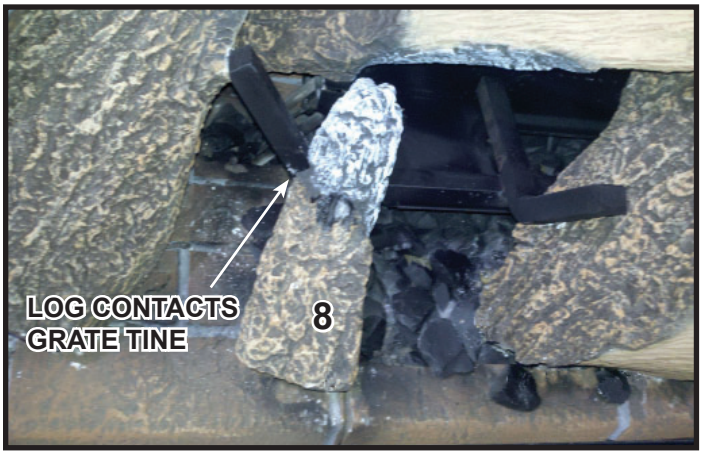

Figure 14.

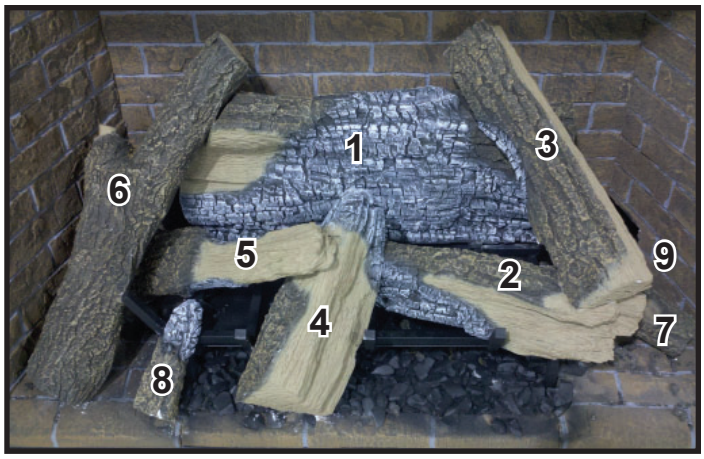

Figure 15. Log Set Installed (Log #9 not visible in this view).

I. IntelliFire Touch® Control System Setup

- Detailed instructions for electrical wiring and connections are provided in Section 8.
- Verify that the 3-Position switch on the IFT-ECM is switched to the REMOTE position. Detailed Operating Instructions for the IFT-ECM are provided in Section 3.J of the Owner's Manual.

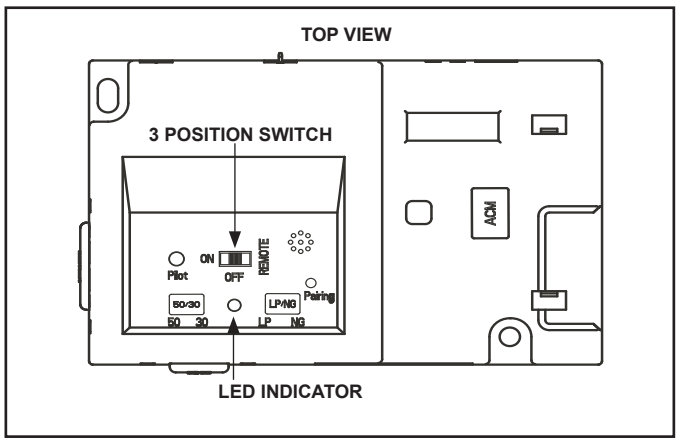

Figure 11.24 IFT-ECM

This appliance is factory-equipped with an IntelliFire Touch remote control. The remote was paired to the fireplace and tested at the factory. It does not need to be paired again, unless an accessory kit will be added at the time of installation. If no additional accessory will be added, simply follow steps one through seven below.

1. If installed, remove batteries from remote.
2. Verify that the new appliance has power and secure electrical connections.
3. Adjust the ECM selector switch to 'REMOTE' mode.
4. Wait to verify LED indicator on the ECM stops flashing.
5. Install batteries in the RC400 remote.
6. The RC400 remote will automatically pair to the appliance as pre-set at the factory.

J. Install Decorative Front

WARNING! Risk of Fire! *Install ONLY decorative fronts approved by Hearth & Home Technologies. Unapproved decorative fronts may cause fireplace to overheat.*

This fireplace has been supplied with an integral barrier to prevent direct contact with the fixed glass panel. DO NOT operate the fireplace with the barrier removed.

Contact your dealer or Hearth & Home Technologies if the barrier is not present or help is needed to properly install one.

For more information refer to the instructions supplied with your decorative front.

12 Reference Materials

A. Vent Components Diagrams

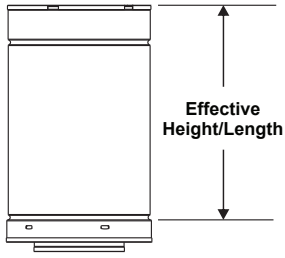

DVP Pipe (see chart)

Pipe	Effective Length	
	Inches	Millimeters
DVP4	4	102
DVP6	6	152
DVP12	12	305
DVP24	24	610
DVP36	36	914
DVP48	48	1219
DVP6A	3 to 6	76 to 152
DVP12A	3 to 12	76 to 305

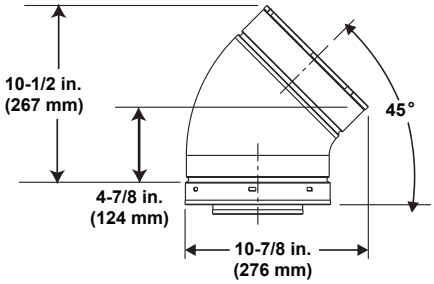

DVP45 (45º Elbow)

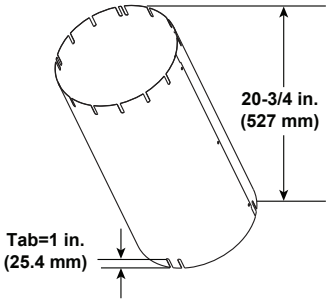

Finished Height: 19-3/4 in./502 mm
UNIV-AS2 (Attic Insulation Shield)

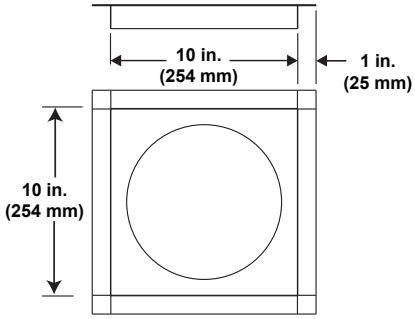

DVP-FS (Ceiling Firestop)

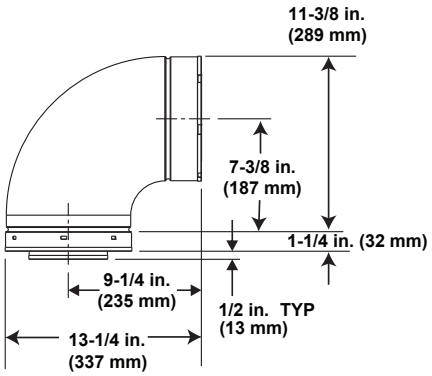

DVP90ST (90° Elbow)

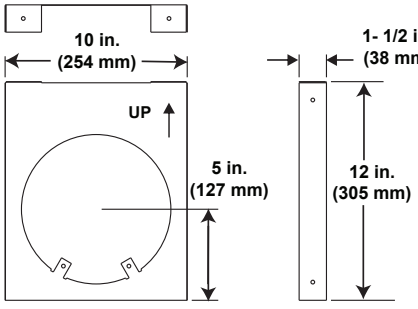

DVP-HVS (Vent Support)

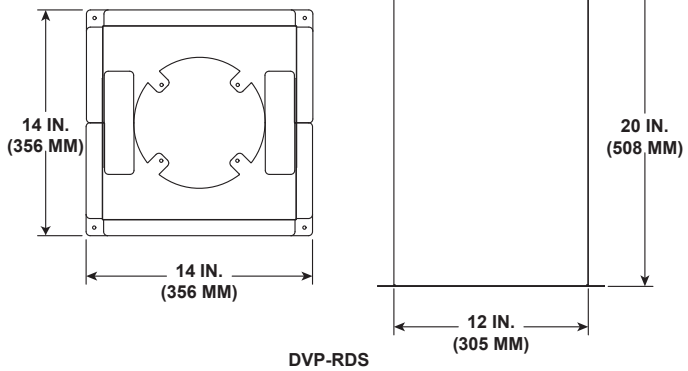

DVP-RDS
ROOF DECK INSULATION SHIELD

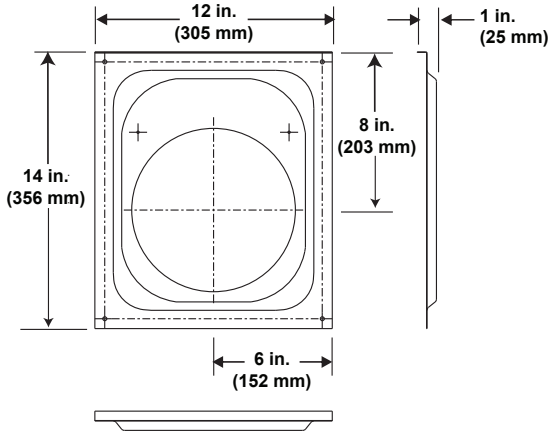

DVP-WS (Wall Shield Firestop)

Figure 12.1 DVP Vent Components

A. Vent Components Diagrams (*continued*)

Note: Heat shields MUST overlap by a minimum of 1-1/2 in. (38 mm). **The heat shield is designed to be used on a wall 4 in. to 7-1/4 in. (102 mm to 184 mm) thick.** If wall thickness is less than 4 in. (102 mm) the existing heat shields must be field trimmed. If wall thickness is greater than 7-1/4 in. (184 mm) a DVP-HSM-B will be required.

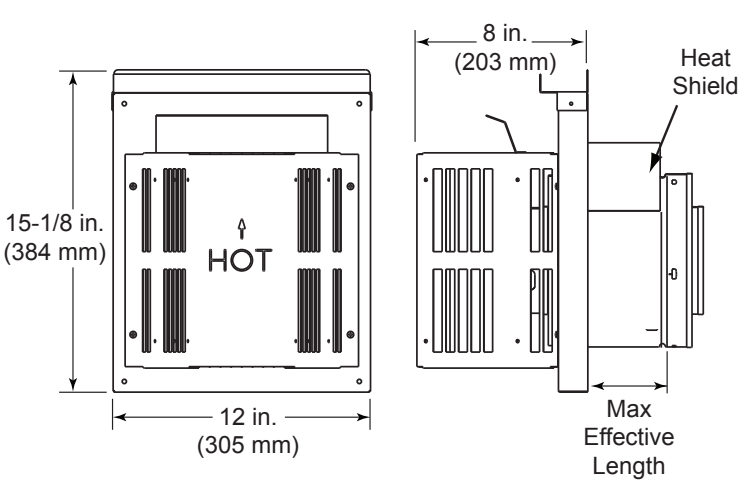

DVP-TRAP
Horizontal Termination Cap

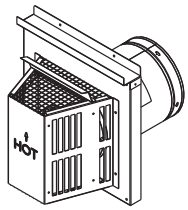

Term Cap	Minimum Effective Length	Maximum Effective Length
Trap1	3-1/8 in.	4-5/8 in.
	79 mm	117 mm
Trap2	5-3/8 in.	9-3/8 in.
	137 mm	238 mm

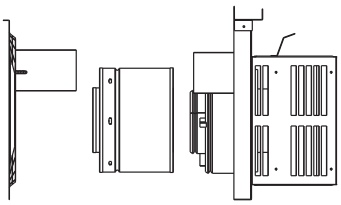

DVP-TRAP1

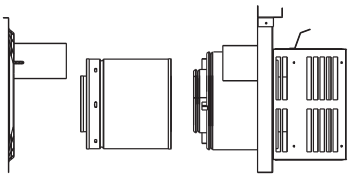

DVP-TRAP2

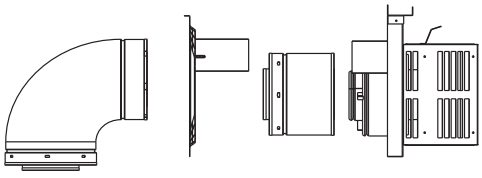

DVP-TRAPK1

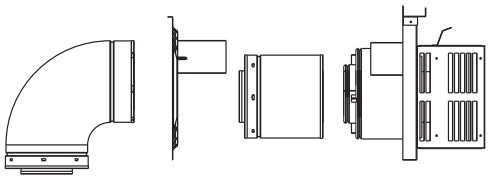

DVP-TRAPK2

Figure 12.2 DVP Vent Components

A. Vent Components Diagrams (*continued*)

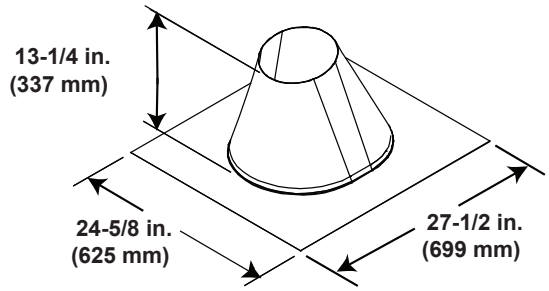

RF6
Roof Flashing Multi-pak

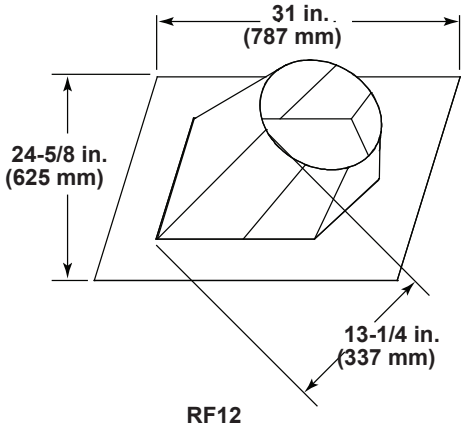

RF12
Roof Flashing Multi-pak

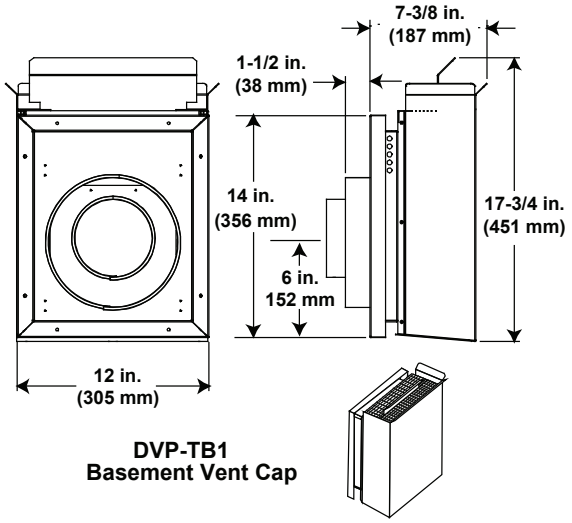

DVP-TB1
Basement Vent Cap

WARNING! Risk of Fire! DO NOT install DVP-TB1 in application where vinyl siding is present.

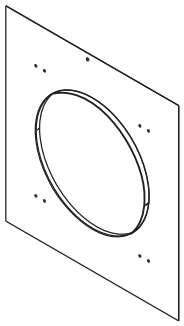

DVP-TRAPFL
Flashing

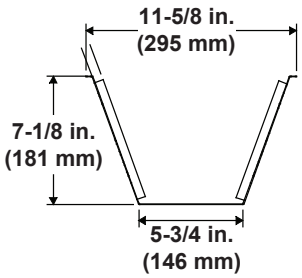

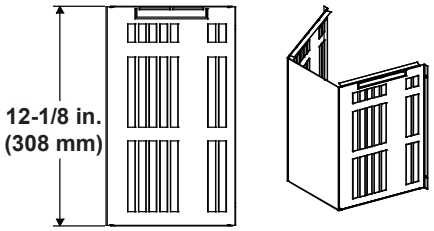

COOL-ADDM
Cap Shield

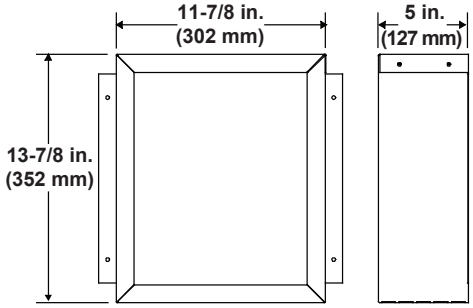

DVP-BEK2
DVP-HPC Cap Brick Extension

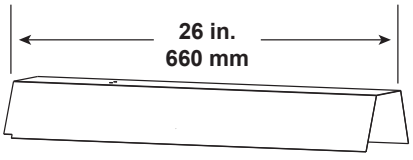

DVP-HSM-B
Extended Heat Shield

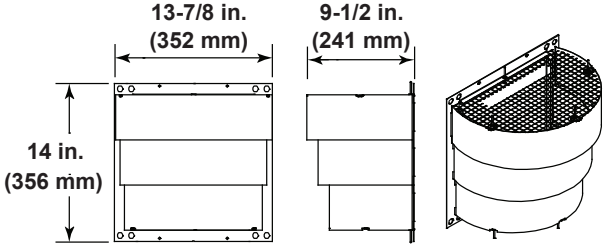

DRC-RADIUS
Cap Shield

Figure 12.3 DVP Vent Components

A. Vent Components Diagrams (*continued*)

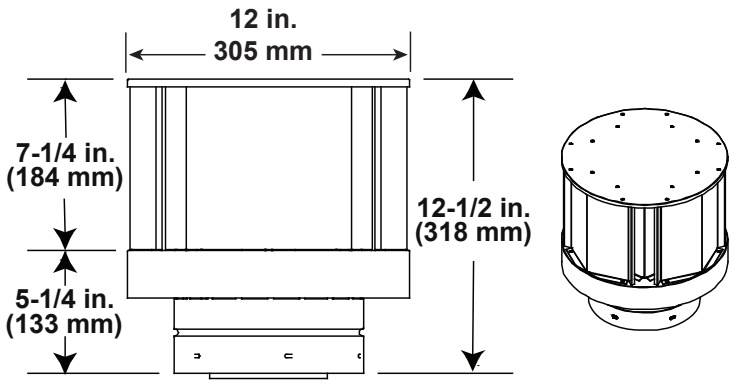

DVP-TVHW
VerticalTermination Cap (Highwind)

Figure 12.4 DVP Vent Components

DECORATIVE TERMINATIONS/SHROUDS

Only use listed decorative termination caps/shrouds with Hearth & Home Technologies approved venting systems.

This applies to both DVP and SLP venting systems.

Decorative Terminations Caps/Shrouds

DTO134
DTO146
DTS134
DTS146
LDS33
LDS46
LDS-BV

A. Vent Components Diagrams *(continued)*

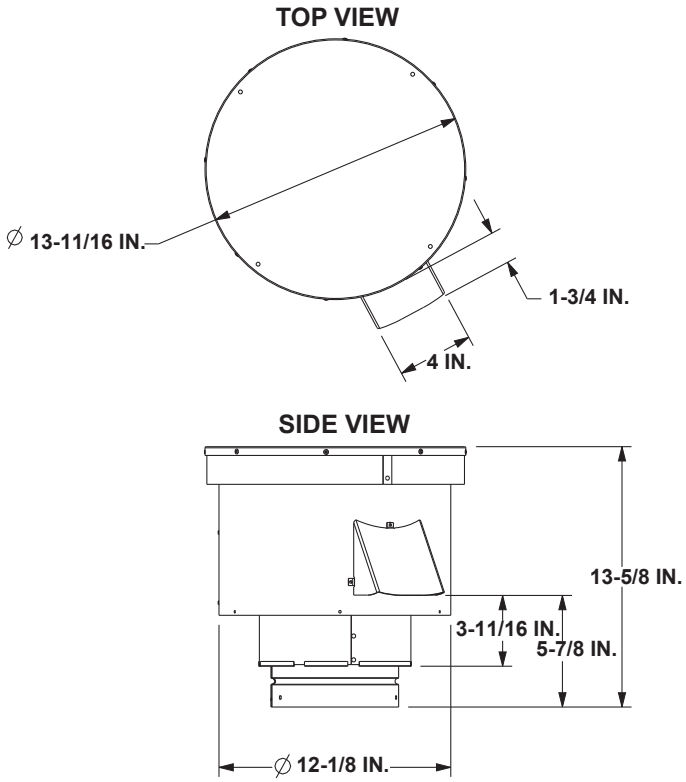

PVV-SLP
Vertical Power Vent

Required Wire Harness and PVV-SLEEVE	
Lengths Available	**Part Number**
10 ft. PV Wire Harness	PVI-WH10
20 ft. PV Wire Harness	PVI-WH20
40 ft. PV Wire Harness	PVI-WH40
60 ft. PV Wire Harness	PVI-WH60
80 ft. PV Wire Harness	PVI-WH80
100 ft. PV Wire Harness	PVI-WH100
Description	**Part Number**
12 in. Wire Harness Sleeve	PVV-SLEEVE-12
48 in. Wire Harness Sleeve	PVV-SLEEVE-48

Note: A wire harness is required to power the PVV-SLP and connect it to the appliance. It is ordered separately from the PVV-SLP. Contact your dealer to order.

Note: The PVV-SLEEVE-12 and/or PVV-SLEEVE-48 is required to be installed with the PVV-SLP. It is ordered separately from the PVV-SLP. Contact your dealer to order.

Figure 12.5 PVV-SLP Vent Components

A. Vent Components Diagrams (*continued*)

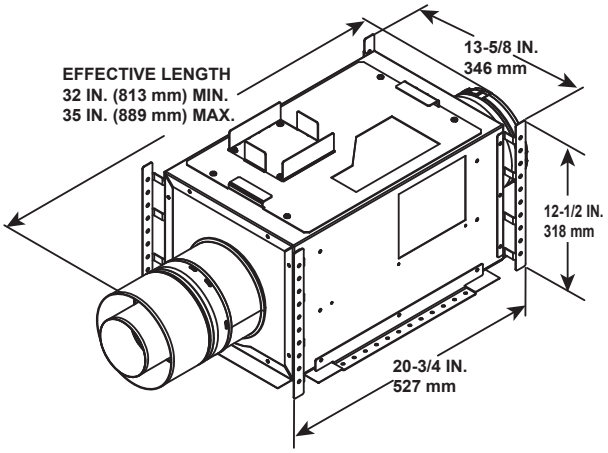

PVI-SLP-B
Power Vent Inline

Optional Wire Harness	
DESCRIPTION	**PART NUMBER**
10 FT PV Wire Harness	PVI-WH10
20 FT PV Wire Harness	PVI-WH20
40 FT PV Wire Harness	PVI-WH40
60 FT PV Wire Harness	PVI-WH60
80 FT PV Wire Harness	PVI-WH80
100 FT PV Wire Harness	PVI-WH100

Note: Wire harnesses required to power the PVI-SLP-B connect to the appliance and are ordered separately from PVI-SLP-B. Contact your dealer to order.

Note: The PVI-SLP-B requires one of the following options to be installed on this appliance.
Option A: IFT-RC400 **OR**
Option B: IFT-RC150, IFT-ACM
These accessories are purchased separately from the PVI-SLP-B. Contact your dealer to order.

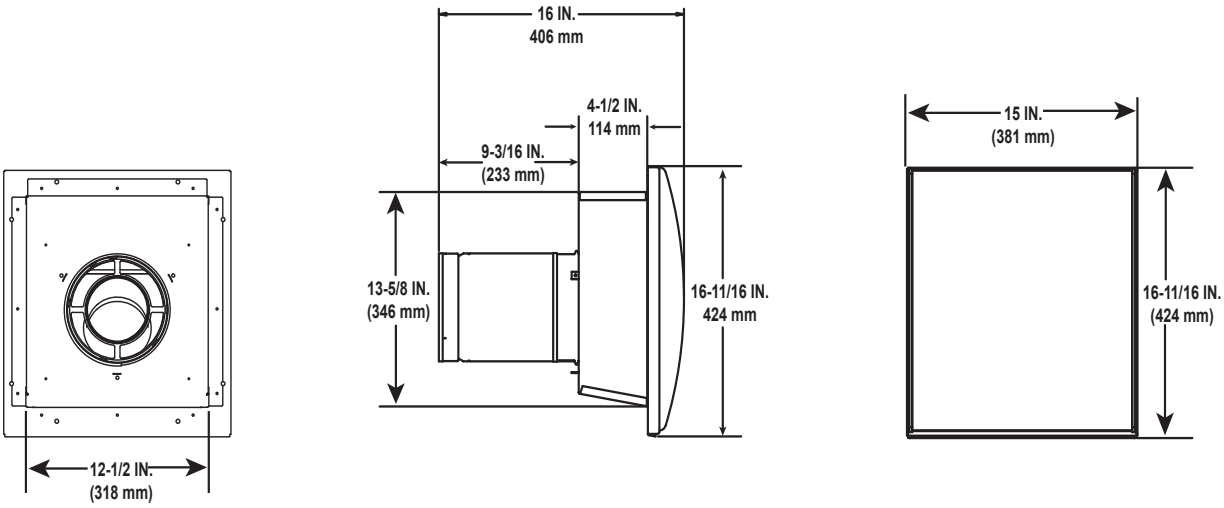

SLP-LPC
SLP Low Profile Cap
(Approved for use with PVI-SLP-B only)

Figure 12.6 PVI-SLP-B Vent Components

A. Vent Components Diagrams (*continued*)

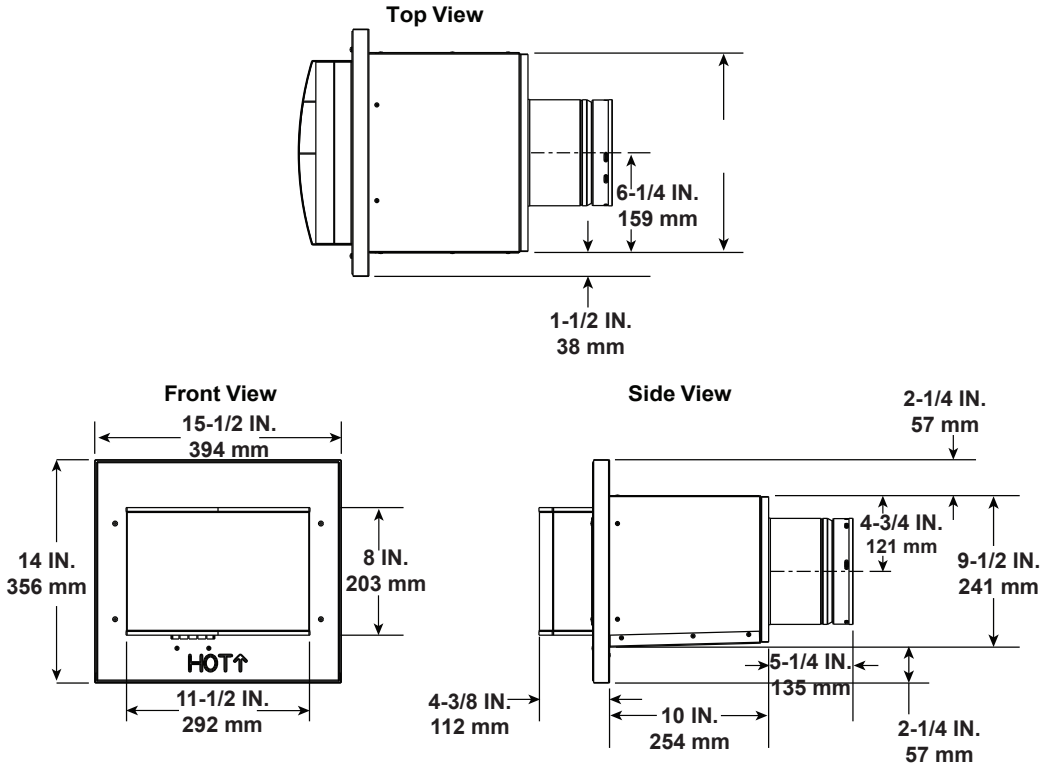

PVLP-SLP
Power Vent Low Profile

Note: Wire harnesses required to power the PVLP-SLP connect to the appliance and are ordered separately from PVLP-SLP. Contact your dealer to order.

Note: A PVLP-HS heat shield is available and sold separately. Use if the PVLP-SLP is installed in a high traffic area.

Note: The PVLP-SLP requires one of the following options to be installed on this appliance.
Option A: IFT-RC400 or Option B: IFT-RC150, IFT-ACM.
These accessories are purchased separately from the PVLP-SLP. Contact your dealer to order.

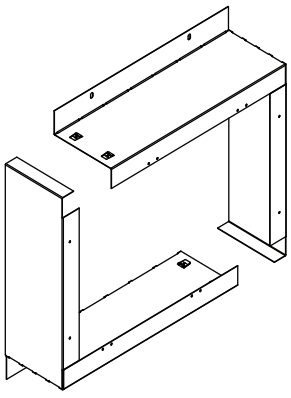

PVLP-BEK
Brick Kit

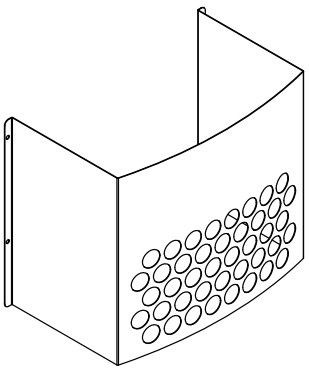

PVLP-HS
Heat Shield

Required Wire Harness	
DESCRIPTION	**PART NUMBER**
10 FT PV Wire Harness	PVI-WH10
20 FT PV Wire Harness	PVI-WH20
40 FT PV Wire Harness	PVI-WH40
60 FT PV Wire Harness	PVI-WH60
80 FT PV Wire Harness	PVI-WH80
100 FT PV Wire Harness	PVI-WH100

Figure 12.7 PVLP-SLP Vent Components

B. Accessories

Install approved accessories per instructions included with accessories. Contact your dealer for a list of approved accessories.

WARNING! Risk of Fire and Electric Shock! *Use ONLY Hearth & Home Technologies-approved optional accessories with this appliance. Using non-listed accessories could result in a safety hazard and will void the warranty.*

Remote Controls, Wall Controls and Wall Switches

Follow the instructions supplied with the control installed to operate your fireplace:

For safety:

- Install a switch lock or a wall/remote control with child protection lockout feature.
- Keep remote controls out of reach of children.

See your dealer if you have questions.

Optional Heat Management Kit

Follow the instruction supplied with the kit for operation.

- Preparation of the appliance for installation of a heat management kit is discussed in Section 5.E.

See your dealer if you have questions.

Heat & Glo, a brand of Hearth & Home Technologies
7571 215th Street West, Lakeville, MN 55044
www.heatnglo.com

Please contact your Heat & Glo dealer with any questions or concerns.
For the location of your nearest Heat & Glo dealer,
please visit www.heatnglo.com.

Printed in U.S.A. - Copyright 2021